SKAA

Speedway Karting Association of Australasia

2022 Rule Book

To obtain the latest version of the rules visit

www.skaa.org.au

2022
Rules & Regulations

NOTE 1	IF THE RULES DON'T SPECIFICALLY STATE THAT YOU CAN DO SOMETHING, YOU MUST RECEIVE WRITTEN CLARIFICATION FROM THE SKAA.
NOTE 2	THE SKAA CLARIFICATION WILL BE POSTED AS AN UPDATE ON THE WEBSITE. THE DECISION OF THE SKAA IS FINAL.
NOTE 3	ALL CLUBS MUST ADHERE TO SKAA KART FORMULA AND SPEEDWAY AUSTRALIA RULES AND REGULATIONS, NOTE: NSW JUNIORS ARE SUBJECT TO NSW LEGISLATION ALSO.
NOTE 4	APPROVAL MUST BE SOUGHT FROM SKAA FOR ANY VARIATION.

SPEEDWAY KARTING ASSOCIATION AUSTRALASIA WEBSITE: www.skaa.org.au

SPEEDWAY AUSTRALIA WEBSITE: www.speedwayaustralia.org.au

The only controlled copy of this document is that found on the computer network.
Printed copies of this document are current as at the time of printing.

Table of Contents

1.0 KART FORMULA 5

2.0 DRIVER ELIGIBILITY 5

3.0 WEIGHTS & BATTERIES 6
- 3.1 WEIGHTS 6
- 3.2 BATTERIES 6

4.0 RACECEIVERS & TRANSPONDERS 6
- 4.1 RACECEIVERS 6
- 4.2 TRANSPONDERS 7

5.0 KART SPECIFICATIONS 7
- 5.1 WHEEL BASE 7
- 5.2 TRACK 7
- 5.3 STEERING 7
- 5.4 EXHAUST 7
- 5.5 ACCELERATOR 7
- 5.6 BRAKES 7
- 5.7 FUEL LINES 7
- 5.8 CHAIN GUARD 8
- 5.9 NUMBERS 8
- 5.10 WHEELS 9
- 5.11 WINGS 9
- 5.12 BODYWORK 9
- 5.13 REAR PUSH BAR 12

6.0 ENGINE MEASURING 14
- 6.1 CLUB EVENTS 14
- 6.2 BLUE RIBBON / FEATURE EVENTS 14
- 6.3 PENALTY 14

7.0 NON-TECH ITEMS – JUNIOR & STANDARD CLASSES 14
- 7.1 NON-TECH ITEMS ARE: 14

8.0 CLASSES 15
- 8.1 SUB-JUNIORS (7-10 YEARS OLD) 80KG 15
- 8.2 JUNIOR “J” (9 -16 YEARS OLD) 110KG 16
- 8.3 JUNIOR STANDARD (13-16 YEARS OLD) 130KG 16
- 8.4 STANDARD (16 YEARS AND OLDER) 130KG 16
- 8.5 STANDARDS HEAVY (16 YEARS AND OLDER) 170KG 16
- 8.6 MODIFIED (16 YEARS AND OLDER) 140KG 16
- 8.7 LADIES – (16 YEARS AND OLDER) 140KG 16
- 8.8 100CC OUTLAW (16 YEARS AND OLDER) 150KG 16
- 8.9 125CC PRO (16 YEARS AND OLDER) 160KG 17
- 8.10 200CC OPEN (16 YEARS AND OLDER) 170KG 17
- 8.11 250CC (16 YEARS AND OLDER) 165KG 17
- 8.12 ALL POWERS CLASS 17
- 8.13 4 STROKE CLASS – STOCK ENGINE 6.5 HP. 18

9.0 PROCEDURES....18
9.1 SKAA ENGINE COMPLIANCE PROCEDURE....18
9.2 SKAA FUEL RULE AND TEST PROCEDURE....19
9.3 FUEL TESTING PROCEDURE....22
9.4 ENGINE MEASURING PROCEDURE....23
9.5 PORT DURATION CHECKS....25
9.6 ENGINE DISPLACEMENT....26

10.0 TECHNICAL SPECIFICATIONS....28
10.1 TECHNICAL SPECIFICATIONS – JUNIOR....28
10.2 TECHNICAL SPECIFICATIONS – SUB-JUNIOR COMER SW80....36
10.3 TECHNICAL SPECIFICATIONS – STANDARDS....44
10.4 TECHNICAL SPECIFICATIONS – 4-STROKE....52

11.0 BY-LAWS....54

12.0 NOTES....61

13.0 UPDATES OF RULES & REGULATIONS....63

1.0 Kart Formula

1.1 All karts must comply with the SKAA Technical Specifications.

1.2 All karts are to be in sound condition; and the frame shall not extend sideways beyond the outside wall of any tyre.

1.3 If a kart has been involved in any crash, that kart must be scrutineered before continuing to race.

1.4 Suspension chassis is not permitted.

1.5 Floor pan

- 1.5.1 All floor pan bolts are to be bolted upward with the nut on the top.
- 1.5.2 No bolt is to protrude in a dangerous manner.
- 1.5.3 Floor tray shall not extend beyond the chassis rails.

1.6 All junior karts must be fitted with an operational kill switch, within easy reach of the driver in the seated position to the satisfaction of the scrutineer. Juniors must have a latching switch. Kill switches are optional for senior classes, with the exception of any kart with a clutch. Seniors can have a latching or momentary switch.

1.7 All kill switches to be clearly marked to specify their operation.

1.8 All seats must be sound and safe condition.

1.9 All seat mounting points shall have a metal washer with a minimum size of 60mm diameter, 1.6mm thick.

1.10 Any ducting used, must be made from non-splinterable plastic or corflute.

1.11 Data loggers, mixture gauges, on-board videos are free to be used but any on-board video footage will not be eligible for dispute resolution. data loggers, gauges, on-board video devices must not be worn on the body or fitted to the helmet.

1.12 The three (3) piece Lewis chassis is permitted.

1.13 All engines must have provision to seal cylinders and heads to the satisfaction of the engine measurer. Extended nuts are to be used where possible. KT1005 cylinder is to have 1 x hex nut replaced with an internal hex nut, so that the cylinder can't be removed with the head in place.

2.0 Driver Eligibility

2.1 Drivers must hold a current Speedway Australia Competitors License.

2.2 A 'One Day' License from Speedway Australia will be accepted; however, it is not for State or National Titles and can only be used for a maximum 2 times per season.

2.3 Drivers must meet the minimum age for the Class they are to compete in.

2.4 National and State Titles

- 2.4.1 A Driver must have completed a minimum of 2 SKAA sanctioned events on a full Speedway Australia Licence.
- 2.4.2 A Day Licence will not be accepted.
- 2.4.3 Drivers competing in a new Class must be approved competent and signed off by a Steward. E.g. a Junior moving up to Standards or Junior Standards.

2.5 New Drivers to a Category and/or a Class, are to run at the rear of the field until proven competent and signed off by a Level 1 or Level 2 SKAA Steward.

3.0 Weights & Batteries

3.1 Weights

3.1.1 A maximum Kart weight for all classes is 100kg. The driver only with the use of scraper, has up to 2 minutes with the presence of an official to remove any excess dirt. If the kart fails to comply, the driver will be excluded from the race. *Effective 3rd July 2022.*

3.1.2 Karts will be weighed by the scales used on the day: Weights recorded & displayed by the scales used on the day are final, the weights will be gauged on that reading for the day.

3.1.3 Weights must only be attached to the frame or seat of the kart.

Weights less than 3kg

Weights less than 3kg must be fastened with a minimum 8mm high tensile bolt and locknut with threads protruding.

Weights greater than 3 kg

Weights above 3kg must be fastened with 2 x 8mm high tensile bolt and locknuts with threads protruding.

Maximum individual weight = 5kg

3.1.4 All weights must have a minimum 30mm washer placed against both the bolt head and the securing nut.

3.1.5 Attached weights must have the kart number clearly printed on them (either by engraving, sticker or paint). Ensure that the Prefix is used along with the Driver's name.

3.1.6 Penalty for Non-compliance – All penalties must be recorded in the driver's logbook.

1st Offence	Loss of points for all heat races completed up to and including the heat where the combined weight was measured and found to be under the class specification.
2nd Offence	Disqualified from the meeting.
3rd Offence (in any 1 season)	Could result in a 12-month suspension.

3.2 Batteries

3.2.1 All Batteries must be sealed. No wet cell Batteries allowed

3.2.2 Battery Mounts be welded, bolted or suitably clamped to the Chassis or frame of the kart.

IF clamps are used, they must be secure. No worm drive hose clamps allowed

IF bolted to the frame holes in frame must be dowelled

3.2.3 All batteries must be secured to the mount using a metal strap / retainer.

The strap is to be a minimum of 19mm wide and 2mm thick.

Strap is to be retained using 2 bolts and nylock nuts

3.2.4 Terminals are to be covered to prevent shorting / sparking.

4.0 Raceceivers & Transponders

4.1 Raceceivers

4.1.1 Raceceivers mandatory and are to be used at all times.

4.1.2 Raceceivers are not to be attached to helmets.

4.1.3 All Raceceiver cords are to be concealed within clothing as best as possible.

4.2 Transponders

4.2.1 Transponders are recommended but optional for club and special events.

4.2.2 Transponders are mandatory for State & National titles.

4.2.3 Transponders are to be fitted to the front of the kart and located on the bottom of the bracket supporting NASSA panel or to the backside of the front nerf bar. An additional cable tie must be used for added security.

5.0 Kart Specifications

5.1 Wheel base

5.1.1 The wheel base shall be a maximum of 1270mm and a minimum of 880mm. The maximum overall length of the kart shall be 1820mm without a nose cone fitted.

5.2 Track

5.2.1 The track shall measure at least two-thirds (66%) of the wheelbase of the kart and shall be measured between tyre centres.

5.3 Steering

5.3.1 Steering wheel shall be a full wheel or aircraft type only. Steering wheel boss to be of metal or aluminium construction and attached to the steering column using a minimum 6mm bolt.

5.3.2 A steering shaft lock collar must be fitted (hose clamps not permitted). All steering components and kingpins must be in safe working order. Steering tie rod ends are to be in good condition with sufficient rod in the rose joint.

5.4 Exhaust

5.4.1 There must be no less than three (3) springs attaching the muffler to the header pipe, and two (2) springs holding the muffler to the cradle.

5.4.2 Exhaust system must be tethered to the kart. Tether is to be made from either throttle or brake cable or similar. Must be fitted between the muffler and header pipe and attached to the frame (Continuous Loop). 2 clamps to be used to secure tether.

5.4.3 Standard and junior classes must comply with class specifications for exhaust. Refer sections

5.5 Accelerator

5.5.1 A return spring must be securely attached between the accelerator pedal and the frame so that the throttle arm returns freely.

5.6 Brakes

5.6.1 A disc brake must be fitted and must be able to stop the kart.

5.6.2 The back wheels should not turn when the brake is applied by hand.

5.6.3 Front brakes are not permitted.

5.6.4 Brakes may be hydraulic or mechanical.

5.6.5 Brake lines must be secured to the frame.

5.7 Fuel Lines

5.7.1 All fuel lines must be securely attached to the kart frame.

5.7.2 Fuel grade hose and fittings must be used.

5.8 Chain Guard

5.8.1 All karts must be fitted with a chain guard that covers the front and rear sprockets to protect the driver from a flailing chain.

5.9 Numbers

5.9.1 All numbers are to be a minimum of 140mm in height with a 10mm white outline and must be in a standard font – NO graphical numbers allowed. Numbers are to be located on the Nassau panel, one on each side of the pod/body panel and one on a plastic/corflute plate securely attached to the rear push bar.

5.9.2 White number plates/white backgrounds must be large enough to carry numbers which must be a minimum of 140mm high. The numbers must be a minimum of 10mm from the edge of the plate/ background.

5.9.3 Numbers must be a plain font.

5.9.4 Seniors are to be white background/black numbers.

5.9.5 Juniors are to be white background/red number.

5.9.6 Junior Standard are to be white background/black number.

5.9.7 Host Club (Club events) or Host State (Titles) have priority if there is a double-up of numbers.

5.9.8 Club Prefixes must be displayed to be of the size and type approved by SKAA and the colour as per the chart below.

5.9.9 Numbers 1, 2 and 3 in each class are reserved for Drivers who finish 1st, 2nd, 3rd in the Australian Title. Australian numbers can be stylised and may include the Australian Flag. Numbers can be Green and Gold or Blue, White and Red or a combination of these colours.

5.10 State Title winners may run the number 1. This number must be Red and White for Juniors and Sub Juniors and Black and White for Junior Standards and senior Classes. Numbers must include the state name or abbreviation. (E.g. Queensland or QLD for Queensland State Title Holders).

SKAA Club Prefix Guidelines

Guidelines for use

The SKAA club prefixes must be used according to these guidelines.

- Prefix must be placed adjacent to the number (See Examples)
- Font - Arial Bold
- Prefix 50mm High (colour)
- Prefix must include a 5mm white border
- Total height of prefix 60mm

Prefix By Club:

Prefix	Club	Prefix	Club	Prefix	Club
S	South Australia	C	Cairns	N	Nhulunbuy
T	Tasmaina	L	Lockyer Valley	NA	ASM&HOF
B	Broom	M	Maryborough	L	Lang
S	Shark Bay	N	North Qld	M	Melbourne
S	South Coast	S	Sunstate	S	Sunraysia
N	Sydney	D	Darwin	Y	Yarra Valley
B	Bundaberg	K	Katherine		

Examples

Colour Palette By State

	SA	Tas	WA	NT	NSW	Vic	Qld
CMYK	0/99/100/0	71/0/100/0	29/82/0/0	0/74/100/0	75/68/67/90	91/80/0/0	0/99/100/0
RGB	255/0/0	51/204/51	255/0/255	255/102/0	0/0/0	0/0/255	255/0/0

Design By: Topline Australia 345 Kent Street Maryborough, Qld, 4650 Ph 0400 713 064 Email:motorsportsales@outlook.com

5.10 Wheels

5.10.1 Wheels are to be maximum diameter of 6" (150mm)

5.10.2 Wheels are to be maximum width of 10" (254mm) and must be one piece. No split rims allowed.

5.10.3 One piece "speedway" style rims with bead lock may be used.

5.10.4 Hex Bolts on Bead Locks must be replaced with Dome headed bolts.

5.11 Wings

5.11.1 Speedway karts may have a wing or air foil. Wings are optional.

5.11.2 It must be securely attached, and all edges must have safety folds or protective strips around raw edges.

5.11.3 Wings must not protrude outside the kart wheel track, and must be behind the seat, and must not protrude out past the rear push bar.

5.11.4 This highest point of the wing shall be no higher than 850mm from ground level.

5.11.5 Wings can be manufactured from non-shatter plastic or corflute and must be in sound condition.

5.11.6 Light gauge aluminium only is allowed to be used only for mounting points, supports or uprights.

5.11.7 No sharp edges.

NOTE: 5.11(A) ALUMINIUM USED FOR THE CONSTRUCTION OF WING ELEMENTS IS NO LONGER PERMITTED.

5.11(B) ALUMINIUM TIP PLATES ARE NO LONGER PERMITTED.

5.12 Bodywork

5.12.1 All karts must run a commercially available side pod. All pods are to be bolted securely to bar-work and no bar-work is permitted on the outside face of the pod. The only mods permitted are for clearance for radiators, air filters, tyres and a hole to allow remote starter access. Body panels can be mounted to side pod.

5.12.2 A body kit is defined as having 2 side panels and a rear wing panel joining the 2 sides. Side panels must exceed 850mm high (from ground level) and the centre section not over 660mm high (from ground level). SEE DIAGRAM 5.12A.

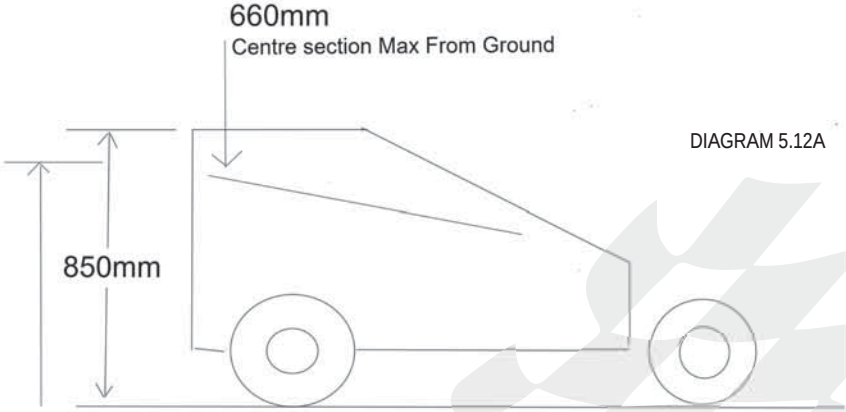

DIAGRAM 5.12A

(Juniors) – Shoulder Height or 700mm whichever is lesser.

5.12.3 Juniors are to have a side panel that is no more than the drivers shoulder height or 700mm high (from ground level) whichever is lower.

BRK KARTS

ENGINES - PARTS

POWERMAC HEADERS & PIPES

BENSON RACING KARTS

www.brk.com.au

08 8358 0439 info@brk.com.au

AVALON SPEEDWAY KARTS

NEW SEASON COMING SOON!

BECOME A MEMBER TODAY

AvalonspeedwayKarts

HALL OF FAME

0414 508 668

Turn 2, 210 Old Melbourne Road

secretary.asmahof@gmail.com

SUPPORTED BY

Avalon Raceway
The Place For Pace
avalonraceway.com.au

5.12.4 Body kits and/or pods outside the wheel track are okay.

5.12.5 The outside maximum width of the body kit and pods is not to exceed 1400mm.

5.12.6 Light gauge aluminium is allowed to be used only for mounting points, supports or uprights.

5.12.7 No sharp edges.

5.12.8 Race tape over corflute edges is acceptable.

5.12.9 Side pods must be fitted along with a Nassau panel on the front.

5.12.10 Nose cone must be fitted to the front of the kart at all times, be of a type commercially available and securely mounted. The nose cone is to be of a size and type suitable for the chassis used.

5.12.11 Super kart style nose cones/Nassau panel combinations must be suitably supported with a factory manufactured nose cone to minimise damage and add support.

5.12.12 All panels to be made from non-shatter plastic or corflute.

5.12.13 Fibreglass Nassau panels are permitted, provided there are no sharp edges and the panel is in sound condition to the Scrutineer's satisfaction.

5.13 Rear Push Bar & Impact Protection.

5.13.1 General & Mounting

5.13.1.1 Rear Push bar / Impact protection must be fitted at all times during a meeting.

5.13.1.2 The impact protection must cover at least 75% of the width of the wheel.

5.13.1.3 May not exceed the greater width of either the bodywork/pods or the rear tyre track.

5.13.1.4 Must have a minimum height of 250mm and a maximum 400mm, measured from the ground level.

5.13.1 .5 Bars are to be secured using brackets provided by manufacturer.

5.13.1.6 May be bolted and braced to chassis. All bolts to be secured using Nylock nuts.

5.13.1.7 For all rubber mounted rear crash bars, a tether must be attached from the rear bar to the bearing hanger on both sides. There must be two (2) cable clamps on each tether and they must be secured in a way that the tether cannot come loose off the carrier or the bar. Tether is to be made from either throttle or brake cable or similar. NOTE: PEANUT CLAMPS OR SIMILAR, WITH 2 X FIXINGS, COUNT AS 2 X CLAMPS.

5.13.2 Steel Type Bar

5.13.2.1 To be a minimum of 18mm and maximum 26.0mm diameter and a minimum 1 .2 mm and Maximum 2.4 mm thickness.

5.13.2.2 May be one piece design or extensions welded to a conventional rear bumper.

5.13.2.2.a Modifications and extension to be carried out in a professional manner.

5.13.2.2.b Extensions may be of 16mm x 1.2mm pipe however it is preferred the original pipe size is used.

5.13.2.3 A Cross rail / intrusion bar is recommended. Refer to example shown on Sketch 5.13A & sketch 5.13B.

5.13.2.4 Must have rounded ends with no open tube facing outwards. It is recommended the ends have a radius with a diameter no less than 120mm.

5.13.2.5 Design open however must meet the parameters and dimensions set out above. Refer to sketch 5.13A & sketch 5.13B for examples.

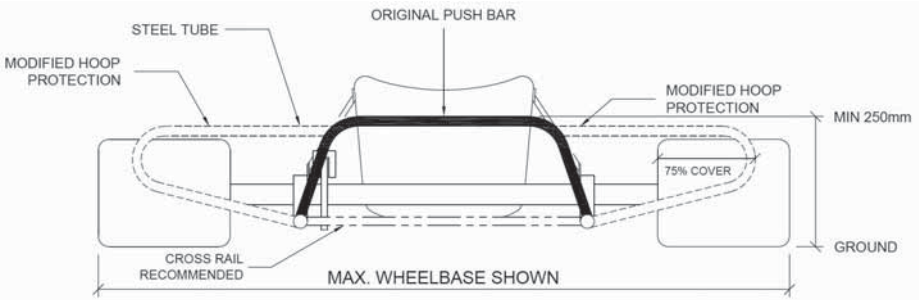

THIS SKETCH/DIAGRAM IS TO BE USED AS AN EXAMPLE
SKETCH 5.13A

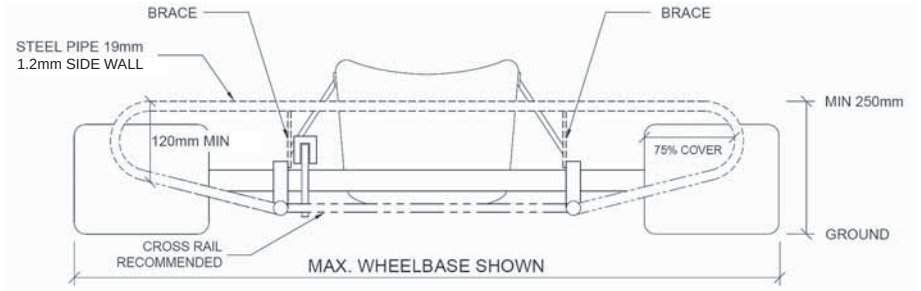

THIS SKETCH/DIAGRAM IS TO BE USED AS AN EXAMPLE
SKETCH 5.13B

5.13.3 Plastic Style

5.13.3.1 Must be a CIK homologated bumper and unmodified.

5.13.3.2 Must be re-enforced with a regular style / steel bar to strengthen for quad bike starts. Refer to sketch 5.13C.

5.13.3.3 May be fitted with original CIK mount or mounted to the regular style rear push bar.

5.13.3.4 Must be a minimum 250mm high and no more than 130mm from the ground.

5.13.3.5 Must remain hollow. No foam filling allowed.

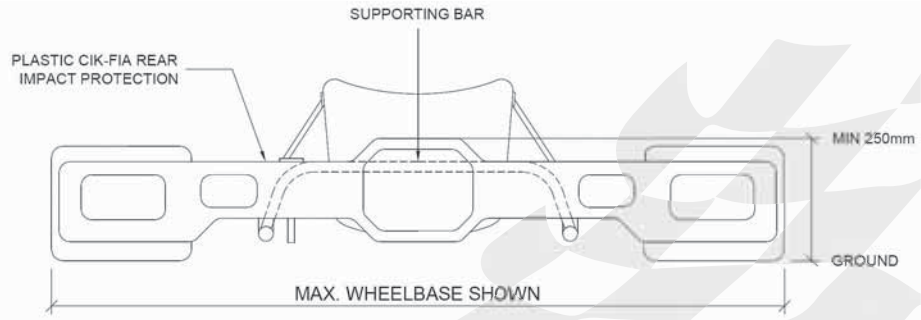

THIS SKETCH/DIAGRAM IS TO BE USED AS AN EXAMPLE
SKETCH 5.13C

6.0 Engine Measuring

6.1 Club Events

6.1.1 Engines can be measured at any time.

6.1.2 The measuring of engines is to be carried out by the Technical Officer.

6.1.3 There is to be another Official present during the measuring and as much care as is possible is to be taken by the Officials to not have any foreign objects enter the engine.

6.2 Blue Ribbon / Feature Events

6.2.1 Engines can be measured at any time.

6.2.2 At the completion of each final in a Blue Ribbon or Feature Event, 1st, 2nd,3rd and 4th placegetters must come off the track and proceed directly to the impoundment area to have their engines measured.

6.2.3 No part/parts are to be removed from the engine prior to the engine being measured.

6.2.4 Engine measuring will be carried out as per the 'SKAA Engine Measuring Procedure' for the class.

6.3 Penalty

6.3.1 Failure to allow an engine to be measured, or use of an illegal engine, or failure to comply with SKAA Engine Specifications' will result in a minimum twelve (12) month suspension for the driver from all Events.

7.0 Non-Tech Items – Junior and Standard Classes

7.1 Non-tech items are:

- gaskets
- seals
- big end roller/cage
- little end spacers
- rings
- washers
- cages
- fasteners
- spark plug
- fulcrum spring (carburettor meter levering spring)
- spark plug lead and cap
- gudgeon pins
- main bearings
- coolant sealing "O" rings
- engine sprocket and key

(i) Unless specified, non-tech items are to be of the same type and style as the original. No alteration from the original manufacturer's specifications is permitted to fit a non-tech item.

(ii) Head gasket/s must be retained.

(iii) Cylinder base baskets are dimensionally free.

(iv) Carburettor base and phenolic spacer gaskets are dimensionally free.

(v) Only crankcase half gasket may be formed from liquid gasket compounds.

(vi) Cylinder base adjusting shims/spacers may be of any material and must be of uniform thickness.

(vii) Spark plugs must have a maximum engagement length of 20mm without the washer.

(viii) Spark plugs for Comer SW80 must have a maximum engagement length of ½ inch (12.70mm) without the washer.

(ix) A direct drive sprocket (complete) cannot weigh more than 100 grams.

(x) A direct drive sprocket retaining nut cannot be made from a hex material greater than 19mm AF.

(xi) Pull start and electric start systems are non-tech, unless otherwise specified in the 125 Class.

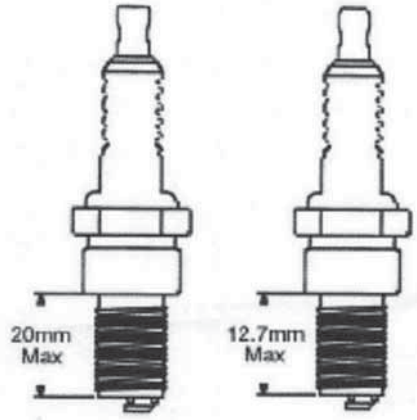

8.0 Classes

8.1 Sub-Juniors (7-10 years old) 80kg

There are 3 engines eligible for Sub-Juniors. *Refer to Technical Specifications 10.*

(a) Restricted J. *Refer to Technical Specifications 10.1.*

(b) Comer SW80 and S80 (in standard unmodified form); *Refer to Technical Specifications 10.2.*

(c) 4 Stroke (Stock) 6.5hp. *Refer to Technical Specifications 10.4.*

8.1.1 Engine specifications are as per the Junior Class with the inclusion of an SKAA approved and supplied exhaust restrictor. Restrictor hole size is not to exceed 13mm. Restrictor is to be placed between the header pipe and the cylinder, so that all exhaust gas must pass through the restrictor hole. SEE DIAGRAM 8.1A BELOW.

8.1.1.1 Restrictor is to remain clean of built up carbon. Failure to maintain a clean restrictor may result in a penalty.

DIAGRAM 8.1A FOR IDENTIFICATION PURPOSES ONLY.

8.1.2 All Sub-Juniors karts are to have a clutch.

8.1.3 Sub-Juniors are eligible to race for Club points and Championship points and are allowed to be included in State or National Title events.

8.1.4 Sub-Juniors and Juniors are permitted to be combined if each class has low numbers, but inexperienced Sub-Juniors must remain separate from experienced Juniors. The combining of the two classes will be at the discretion of the Chief Steward. Sub-Juniors will run from the rear of the Junior field.

8.1.5 The two classes will still be considered separate and competing for their own points. Points are non-transferable when a driver graduates from Sub-Juniors to Juniors.

8.1.6 Driver must have a parent or guardian who holds a full Speedway Australia Licence with them whilst racing.

8.2 Junior "J" (9-16 years old) 110kg

This class is a single engine class only using the Yamaha KT-100J. *Refer to Technical Specifications 10.1.*

8.2.1 Driver must have a parent or guardian who holds a full Speedway Australia Licence with them whilst racing.

8.3 Junior Standard (13-16 years old) 130kg

All specifications from the Standard Class must be met. *Refer to Technical Specification 10.3.*

8.3.1 Driver must have a parent or guardian who holds a full Speedway Australia Licence with them whilst racing.

8.3.2 Junior Standards cannot run with any other Junior class.

8.4 Standard (16 years and older) 130kg

This class is a Single engine class only using the Yamaha KT-100S. *Refer to Technical Specifications 10.3.*

8.5 Standards Heavy (16 years and older) 170kg *Effective 3rd July 2022*

All Rules as per Standard Class. *Refer to Technical Specifications 10.3.*

8.5.1 Drivers cannot compete in both 'Standard' and 'Standard Heavy' classes if they are both on the same program.

8.6 Modified (16 years and older) 140kg (Air cooled / water cooled)

8.6.1 Minimum age is 16 years.

8.6.2 The only engines eligible for this class are the KT100S and the A.R.C., which shall both remain visually stock from the front face of the carburettor to the rear face of the exhaust port.

8.6.2.l Inlet track Length – Minimum inlet track length shall be 63mm measured from the outer carburettor adaptor face to the piston wall.
– Phenolic spacer and alloy carburettor adaptor must be retained.
– Gaskets may be added to achieve the minimum dimensions.

Procedure Measurement is to be token in the centre of the bottom of the inlet port. Using a Vernier caliper, measure from the highest point of the piston wall (outer edge) to the face of the carburettor adaptor with the outer carburettor gasket removed.

Glossary – Piston wall is also known as piston skirt
– The outer gasket referred above, is the gasket used between the adaptor and carburettor.

8.6.3 Internal modifications are permitted within the engine.

8.6.4 After-market cranks are permitted provided the stroke does not exceed that of a genuine Yamaha/A.R.C. (46.13mm).

8.6.5 Ignition is Open, must be commercially available. No Digital or Programmable Ignition allowed.

8.6.6 Maximum engine displacement shall be 100cc + 10% = 110cc.

8.6.7 Maximum bore size is 55.10mm.

8.6.8 Bore and stroke checks are carried out using the standard SKAA Test Procedure 9.3 Engine Measuring.

NOTE: HYBRID ENGINES BUILT FROM A.R.C. AND YAMAHA KT 100S PARTS ARE ALLOWED.

8.7 Ladies (16 years and older) Standard engine 130kg, Modified engine 140kg

8.7.1 Ladies class can run either modified or standard engines. Modified engines to run under Modified rules – see 8.6 above. Standard engines to run under standard rules – see 8.4 above.

8.8 100cc Outlaw (16 years and older) 150kg (Air cooled / water cooled)

8.8.1 Minimum age is 16 years.

8.8.2 Engines eligible for the Outlaw Class shall be any 100cc purpose built 2-stroke kart engine of rotary valve, reed valve or piston port configuration.

8.8.3 Engines must remain visibly stock, though internal modifications are permitted.

8.8.4 Ignition is Open, Must be commercially available. No Digital or Programmable Ignition allowed.

8.8.5 Carburettor shall be of single throat type only.

8.8.6 Maximum engine displacement shall be 100cc + 10% = 110cc to allow for rebuilding.

8.9 125cc Pro (16 years and older) 160kg

(Air cooled / water cooled)

8.9.1 Minimum age is 16 years.

8.9.2 Clutches are compulsory.

8.9.3 100cc Outlaw engine with clutch NOT permitted.

8.9.4 Engines eligible for this class are:

8.9.4.1 Any 2-stroke commercially available kart engine of rotary valve, reed valve or piston port configuration up to 125cc + 8% with a factory fitted clutch. Engine must remain in original configuration (i.e. centrifugal clutch and electric starter) using the original style clutch only. Starter motor must remain and be functional/operational as supplied by the manufacturer;

OR

8.9.4.2 Any gearbox style 2-stroke kart engine of rotary valve, reed valve or piston port configuration up to 125cc + 8%.

8.9.4.3 Any dirt bike engine up to 125cc + 8% capacity; OR

8.9.5 Modifications to all types of engines are permitted.

8.9.6 Carburettors are open size or type, but only a single throat permitted, exhaust system is free,

8.9.7 Ignition is Open, Must be commercially available. No Programmable Ignition allowed

8.9.8 The 125cc Gear Box and 125cc Non-Gear Box karts must be separated at Blue Ribbon events (State and National Titles).

8.10 200cc Open (16 years and older) 170kg

8.10.1 Minimum age is 16 years.

8.10.2 Previous race experience is required, and the driver must be signed off by a Chief Steward as competent.

8.10.3 Open class allows 2 x 100cc (+10%) engines = 200cc (+10%).

8.10.4 Displacement 200cc (+10%).

8.10.5 No gearbox allowed.

8.10.6 Clutch permitted.

8.11 250cc (16 years and older) 165kg

8.11.1 Minimum age is 16 years.

8.11.2 Previous race experience is required, and the driver must be signed off by a Chief Steward as competent.

8.11.3 Any single cylinder motorcycle engine of 2 or 4 stroke configuration up to 250cc (+10%).

8.11.4 Must run with gearbox and fully operational clutch.

8.11.5 Must have a fully operational clutch.

8.11.6 Must be fitted with an operational kill switch, readily accessible by the driver in the standard seated position

8.12 All Powers Class

8.12.1 This is a combination of the Modified, Outlaw and 125cc Classes.

8.12.2 All specifications including minimum weight for each class must be met.

8.13 4 Stroke Class – Stock engine 6.5 hp.

This Class is a Club Class and is not eligible for State or National Titles. *Refer to Technical Specifications 10.4.*

This Class is a single engine class which may be used by the following Classes:

- Sub-Junior (80kg) 7 – 9 years
- Junior (120kg) 9 – 16 years
- Senior (130kg) 16 years and over

9.0 Procedures

9.1 SKAA Engine Compliance Procedure

9.1.1 Purpose

The purpose of this Procedure is to provide clarity and consistency to all members, drivers and visitors regarding how to undertake the process of engine inspections.

9.1.2 Scope

This procedure applies to all members of SKAA.

9.1.3 Procedure

9.1.3.1 Air Intake

9.1.3.1.1 Visual inspection only required.

9.1.3.2 Carburettor (Carby) Checks

9.1.3.2.1 This can be carried out with a torch and mirror. Note: Part number of carby is stamped on carby body

9.1.3.2.2 The bore of the carburettor to be checked to the specifications within the Rule Book.

9.1.3.3 Inlet Port

9.1.3.3.1 This can be checked with a torch being shone through the carby.

9.1.3.3.2 The removal of the carby may be carried out at the measurer's request.

Note: if engine is suspect further disassembly would be required.

9.1.3.4 Transfer Port

9.1.3.4.1 Removal of cylinder head and using a torch and mirror, shine light in and carry out a visual examination.

NOTE: IF ENGINE IS SUSPECT FURTHER DISASSEMBLY WOULD BE REQUIRED.

9.1.3.5 Exhaust Port

9.1.3.5.1 Removal of header pipe is required to carry out a visual examination.

9.1.3.5.2 The head may be removed to check to check the transfer port also.

NOTE: IF ENGINE IS SUSPECT FURTHER DISASSEMBLY WOULD BE REQUIRED.

9.1.3.5 Sub-Junior Restrictor Plate

9.1.3.5.1 Removal of header pipe required to carry out a visual inspection.

9.1.3.5.2 Using the SKAA approved 'no go' gauge, check for correct size – should be 13mm maximum.

9.1.3.6 Header Pipe

9.1.3.6.1 A visual inspection.

9.1.3.6.2 Must be commercially available and to specification.

9.1.3.6.3 Measurements to be carried externally.

9.1.3.6.4 May be removed and measured at the Official's discretion.

9.1.3.7 Stroke

9.1.3.7.1 To be measured as per SKAA Procedure.

9.1.3.8 Engine Displacement

9.1.3.8.1 To be measured as per SKAA Procedure.

9.1.3.9 Cylinder Head

9.1.3.9.1 CCing should be carried as per SKAA Procedure.

9.1.3.9.2 Removal and inspection is at the Official's discretion.

9.1.3.10 Exhaust Pipe/Muffler

9.1.3.10.1 Visual inspection of the diameter and/or homologation plate.

9.1.3.10.2 Measurements to be conducted externally for compliance to the rules.

9.1.3.10.3 Gauge to be used to confirm compliance.

9.1.3.11 Piston

9.1.3.11.1 Ramping of piston crown and arcs cut into piston skirt can be checked visually by examining the crown of the piston when the head is removed.

9.1.3.11.2 The skirt of the piston can be examined visually when inlet tract is examined.

Note: Changes to/or additions to the SKAA Procedures can be altered at any time by the Association.

9.2 SKAA Fuel Rule and Test Procedure

9.2.1 Purpose

The purpose of this Procedure is to provide clarity and consistency to all members, drivers and visitors regarding the Fuel Rule and Test Procedure of SKAA.

9.2.2 Scope

This procedure applies to all members of Speedway Karting Association of Australasia (SKAA) as well as all drivers and crew.

DEVIL RACE KARTS

HAND BUILD KARTS

www.devilracekarts.com.au

BURRIS RACING TYRES
EDWARDS KARTING WHEELS
RACE WINNING ENGINES

Burris RACING

EDWARDS KART WHEELS

(08) 8347 1941

ed@edwardskartwheels.com.au

MSKC

MELBOURNE SPEEDWAY

KART CLUB

MEMBERSHIPS NOW AVAILABLE

RACING FOR ALL AGES

MODIFIED

SUB JUNIOR

OUTLAW

OPEN

STANDARD

JNR STANDARD

JUNIORS

WWW.MSKC.COM.AU

FOLLOW US

9.2.3 Procedure

9.2.3.1 Ethanol is not permitted for use in SKAA events.

9.2.3.2 Only fuels approved by the SKAA are permitted to be used. Those fuels are:

9.2.3.2.1 Premium Unleaded Petrol (PULP) or Regular Unleaded Petrol (ULP) issued via pump from a commercial fuel supplier and produced by major refineries.

9.2.3.2.2 Pump fuel: is a commercial fuel (as defined in 4.2.1) and is available for sale on-demand from a roadside retail bowser outlet, at each of at least five separate service stations in at least three Australian states. The mixture of pump fuels with the same hydrocarbon profile is permitted (e.g. brands of ULP such as: ethanol-blended fuels, ULP or diesel fuels may not be mixed).

9.2.3.2.3 VP C9

9.2.3.3 Approval for the use of other fuels must be sought from the SKAA Technical Committee. The result of such approval must be publicised to all members.

9.2.3.4 Only one type of fuel is to be used. No mixing of different types of fuel is permitted.

9.2.3.5 Only ambient air may be mixed with the fuel as an oxidant.

9.2.3.6 Only commercially available motor oil that does not contain any performance enhancing additives may be used.

9.2.3.7 No substance other than oil, as described in this rule, may be added to petrol used in competition.

9.2.3.8 Competitors must disclose the brand of oil and fuel used and the mixing ratio, if requested by the Event Organiser or SKAA Technical Officer/Fuel Tester.

9.2.3.9 In addition, the fuel must contain no substance, which is capable of exothermic reaction in the absence of external oxygen.

9.2.3.10 Any petrol that appears to have been formulated in order to subvert the purpose of these regulations will be deemed to be outside them.

9.2.3.11 All fuels must have properties and characteristics as required by Federal and/or State Government Regulations for PULP or ULP.

9.2.3.12 When requested, Drivers must provide a fuel sample from the tank.

9.2.3.13 Test methods for permitted fuels will be as recommended to the SKAA from time to time by the National Fuel Tester.

9.3 Fuel Testing Procedure

9.2.1 Purpose

The purpose of this Procedure is to provide clarity and consistency to all members, drivers and visitors regarding rules and methodology for SKAA Fuel Testing.

9.3.2 Scope

This procedure applies to all members, visiting officials and volunteers of SKAA.

9.3.3 Procedure

9.3.3.1 The Digitron Test

9.3.3.1.1 Calibrate Digitron in a fresh sample of cyclohexane (C6H12) – the display should read minus75 (-75).

9.3.3.1.2 Place the sensor in a competitor's fuel tank and record the reading.

9.3.3.1.3 Between each driver's sample, spray the sensor with a good quality brake cleaner and allow it to dry, let the meter normalise prior to testing the next batch of fuel.

Note: If you are using the standard base number of -75 and the reading is zero (.000) or a negative number, the fuel is legal.

9.3.3.1.4 If the sample fails the first test, a second test is to be conducted using a sample removed from the competitor's fuel tank. The temperature of the sample being tested must be within 3°C of the cyclohexane calibration sample. A recalibration with fresh cyclohexane is to be done before a second sample is tested.

9.3.3.1.5 If the second test fails, then the fuel is deemed to be illegal.

9.3.3.1.6 The SKAA may send the sample away to be tested at the SKAA's nominated fuel testing laboratory.

9.3.3.1.7 All competitors will be given the opportunity to have their fuel checked before the start of the event.

Note: Fuel rules will be subject to revision as more data is collected.

9.3.3.2 Fuel Safety

9.3.3.2.1 All participants in motor sport are reminded that fuel, oils, lubricants and coolants are highly specialised substances. Participants must be aware that these agents may contain substances that are extremely dangerous to one's health if misused, inhaled or allowed to come into contact with human skin.

9.3.3.2.2 Some of the ingredients of these fuels, oils, lubricants and coolants are suspected of having the potential to cause cancer in rare instances.

9.3.3.2.3 The use of petrol as a general cleaning and washing agent is a common misuse of a potentially dangerous substance and SKAA strongly uses all members against using petrol in this way.

9.4 Engine Measuring Procedure

9.4.1 Purpose

The purpose of this Procedure is to provide clarity and consistency to all members, drivers and visitors regarding rules of SKAA for measuring engines.

9.4.2 Scope

Engines along with fuel, can be gauge checked at any time by the designated officer of SKAA and apply to all members and visitors.

9.4.3 Equipment Required

Refer to SKAA Equipment List.

9.4.4 Procedure

9.4.4.1 Head Volume

(i) Yamaha "J" minimum head volume is 11cc.

(ii) KT 100S minimum head volume is 11cc (standard only).

9.4.4.1.1 Allow engine to cool to ambient temperature.

9.4.4.1.2 Ensure the engine is on a level surface.

9.4.4.1.3 Rotate the engine to TDC (top dead centre)

9.4.4.1.4 Screw the SKAA CC test plug into the spark plug hole and withdraw plug approximately 2 turns.

9.4.4.1.5 Fill the combustion chamber with 11cc of test fluid. (50% Diesel + 50% Automatic Transmission Fluid.)

9.4.4.1.6 Check Fluid is IN the Test Plug.

9.4.4.1.7 Tighten the test plug.

9.4.4.1.8 Slowly rotate engine forwards and backwards to determine TDC.

9.4.4.1.9 There must be NO fluid spilled from the test plug. Any overflow or spillage deems the engine illegal.

9.4.4.2 Second Test

9.4.4.2.1 The competitor may ask for a second test.

9.4.4.2.2 The engine is to be cleaned of test fluid by using appropriate cleaning fluid or Unleaded Petrol only.

9.4.4.2.3 The cylinder head is NOT to be removed.

9.4.4.2.4 If the second test fails, then the engine is deemed to be illegal.

9.4.5 SKAA Engine Measuring & Inspection Kit Contents and Checklist

Equipment required to carry out Engine Measuring and Inspection.

No.	Item	Check
1.	Copy of current SKAA Rules	☐
2.	Copies of SKAA Procedures (laminated)	☐
	- PRO1 Engine Compliance	☐
	- PR02 Fuel Rule and Test	☐
	- PR03 Fuel Testing	☐
	- PR04 Engine Measuring	☐
	- PR05 Port Duration Checks	☐
3.	SKAA Infringement Book	☐
4.	Test Result Sheet	☐
5.	Stationery – paper, clipboard, pen, permanent marker	☐
6.	"Digatron" (Fuel Tester) and Cyclohexane	☐
7.	75/100 mm Dial Indicator	☐

No.	Item	Check
8.	Standard "B" burette preferred 25mm	☐
9.	Fluid for use in burette 50/50 mix of Automatic Transmission fluid and Diesel	☐
10.	6' or 0-150 mm Digital Vernier	☐
11.	SKAA "Piston Travel" gauge and rods	☐
12.	SKAA Port 'No Go' gauge – 2 sizes	☐
	- *Rod 'J'*	☐
	- *Rod 'S'*	☐
	- *Rod 'Comer'*	☐
13.	CC plug (standard issue SKAA type plug)	☐
14.	CC plug – Comer Type 2	☐
15.	Bore 'No Go' gauge made from Plastic	☐

No.	Item	Check
16.	Pencil Torch	☐
17.	Stanley knife blade	☐
18.	1 x 5 mm Hex (Allen) key 'T' type	☐
19.	1 x 6 mm Hex (Allen) key 'T' type	☐
20.	1 x 8 mm Hex (Allen) key 'T' type	☐
21.	1 x 10 mm Socket	☐
22.	1 x 12 mm Socket	☐
23.	1 x 13 mm Socket	☐
24.	1 x Extension Rod for Socket	☐
25.	1 x Ratchet Wrench for Sockets	☐
26.	1 x Spark Plug spanner 13/16	☐

No.	Item	Check
27.	1 x Flat screwdriver	☐
28.	1 x Star (Phillip's head) screwdriver	☐
29.	1 x 6' or 12' steel ruler	☐
30.	1 x SKAA 'No Go' gauge for Sub-Junior Restrictor Plate	☐
31.	1 x genuine SKAA Sub-Junior Restrictor plate	☐
32.	Engine seals (provided by SKAA)	☐
33.	Fuel tester Kit / sample bottles for sending to Lab	☐
34.	Non-contact Thermometer (Gun)	☐

9.5 Port Duration Checks

9.5.1 Purpose

The purpose of this Procedure is to provide clarity and consistency to all members, drivers and visitors regarding the SKAA rules and process for checking the gauges of vehicles.

9.5.2 Scope

This procedure applies to all members and visitors of SKAA.

9.5.3 Equipment Required

As per SKAA Equipment List.

9.5.4 Procedure

9.5.4.1 Port Gauge checklist

9.5.4.1.1 Screw the body of the 'Piston Travel Gauge' into the cylinder head.

9.5.4.1.2 Select correct rod for the engine type being checked and fit into gauge.

9.5.4.1.3 Turn engine in the direction of rotation until the highest point in the stroke is found; and adjust the head of the gauge to line up with the bottom groove in the rod.

9.5.4.1.4 Slowly turn the engine in the direction of rotation until the lowest point in the stroke is found. The top groove on the rod should line up with the head of the gauge.

9.5.4.1.5 Place the 5mm pin in the top of the exhaust port and rotate the engine until the piston makes light contact. The second top groove should be in line or below the head of the gauge. If the groove on the rod is above the head of the gauge, then the engine does not conform.

9.5.4.1.6 With the 5mm pin still in the exhaust port, adjust the head of the gauge until it is in line with the second top groove.

9.5.4.1.7 Remove pin and rotate engine to TDC (top dead centre), insert pin into the inlet port and rotate engine until the piston contacts the pin. The third groove on the rod should be in line or above the head of the gauge. If the groove is below, then the engine does not conform.

9.5.4.2 Bore Size

9.5.4.2.1 Comer SW80 bore size is 52.10mm.

9.5.4.2.2 Yamaha "J" maximum bore size is 52.9mm.

9.5.4.2.3 KT 100S maximum bore size is 55.1mm (Standard and Modified).

9.5.4.2.4 A quality digital calliper is to be used to check the bore size. If the size is suspect, then a bore gauge and micrometre is to be used.

9.5.4.3 Stroke

9.5.4.3.1 Comer SW80 maximum stroke is 38.10mm.

9.5.4.3.2 Yamaha "J" maximum stroke is 50.05mm.

9.5.4.3.3 KT 100S maximum stroke is 46.13mm.

9.5.4.3.4 The piston travel gauges are to be used to check the stroke. If the stroke is suspect, then a dial indicator is to be used.

9.5.4.4 Piston Travel Measurements in millimetres (mm)

ENGINE	MAXIMUM STROKE	TDC TO EXHAUST OPENING	EXHAUST OPENING TO INLET OPENING	EXHAUST OPENING TO TRANSFER OPENING (USING ROD WITH 5 GROOVES)	EXHAUST OPENING TO TRANSFER OPENING (USING ROD WITH 4 GROOVES)
Comer SW80	38.10	32.20 Max / 31.20 Min	21.40 Min	3.70 Min	N/A
KT100J	50.05	38.30 Min	26.80 Min	6.00 Min	N/A
KT100S	46.13	30.80 Min	14.80 Min	9.50 Min	N/A

9.6 Engine Displacement Using Dial Indicator

9.6.1 Purpose

The purpose of this Procedure is to provide clarity and consistency to all members, drivers and visitors regarding the SKAA rules and process for checking the gauges of vehicles.

9.6.2 Scope

This procedure applies to all members and visitors of SKAA.

9.6.3 Equipment Required

100mm Dial Indicator and custom adaptor by SKAA.
Digital Vernier or Bore Gauge (35mm to 50mm)

9.6.4 Procedure

9.6.4.1 Dial Indicator checklist

9.6.4.1.1 Remove spark Plug

9.6.4.1.2 Screw the body of custom guide and the 'Dial indicator into the cylinder head.

9.6.4.1.3 Turn engine in the direction of rotation until the lowest point in the stroke is found "BDC".

Adjust the gauge to read zero.

9.6.4.1.4 Slowly turn the engine in the direction of rotation until the highest point in the stroke is found. Record the reading.

Repeat the steps 3 times and have a witness confirm the reading. Record Readings using camera, pen and paper.

If the Dial indicator is to be used for the standard class and the readings are out the limitations then the engine does not conform.

If the instrument is used for the open classes then proceed to the next step (9.6.4.1.5) removing the cylinder head and measure the bore size.

9.6.4.1.5 Carefully remove the cylinder head. Measure the bore diameter using a Vernier calliper or Bore gauge.

Repeat the process 3 times and have witnessed by. Record the reading using Camera, pen and paper.

9.6.4.1.6 Calculate the engine displacement.

Now confident all measurements are correct and accurate calculate the displacement using the formula, .0785 x bore diameter Squared, x Stroke divided x 100. The Calculation displacement should not be no greater than that allowed by each class. If the calculated displacement is greater than that allowed the engine does not conform. Refer to chart below.

Formula: $\frac{\text{(Bore diameter 2) x Stroke x 0.0785}}{100}$ = CC

Example: Bore = 50mm, Stroke = 55mm

$$\frac{(50 \times 50) \times 54 \times 0.0785}{100} = 105.975 \text{ CC}$$

9.6.4.2 Bore Size Standard Classes

9.6.4.2.1 Comer SW80 bore size is 52.10mm.

9.6.4.2.2 Yamaha "J" maximum bore size is 52.9mm.

9.6.4.2.3 KT 100S maximum bore size is 55.1mm (Standard and Modified).

9.6.4.2.4 A quality digital calliper is to be used to check the bore size. If the size is suspect, then a bore gauge and micrometre is to be used.

9.6.4.3 Stroke for standard Classes

9.6.4.3.1 Comer SW80 maximum stroke is 38.10mm.

9.6.4.3.2 Yamaha "J" maximum stroke is 50.05mm.

9.6.4.3.3 KT 100S maximum stroke is 46.13mm.

9.6.4.3.4 The piston travel gauges are to be used to check the stroke. If the stroke is suspect, then a dial indicator is to be used. Refer to Procedure 9.5

9.6.4.4 Displacement allowed per Class

CLASS	STANDARD CC	% OF INCREASE ALLOWED	MAXIMUM ALLOWABLE CC
Comer SW80			81.183
KT100J	100cc	+10%	110cc
KT100S	100cc	+10%	110cc
Modified	100cc	+10%	110cc
Outlaw	100cc	+10%	110cc
125 Pro	125cc	+8%	135 cc
125 Gear Box	125cc	+8%	135 cc

10.0 Technical Specifications

10.1 Technical Specifications – Junior

Junior Classes

Yamaha KT100J Series

Technical Specification

10.1.1 Purpose

The purpose of this Technical Specification is to provide clarity and consistency to all members regarding engine specifications for drivers and members of SKAA.

10.1.2 Scope

10.1.2.1 This procedure applies to all members of SKAA.

10.1.2.2 Unless otherwise specified, the engines must be original in all their components according to the Yamaha KT100J drawings.

10.1.2.3 Any removal, addition or polishing of material is strictly forbidden.

10.1.2.4 Sandblasting, glass bead blasting, peening, acid etching, spark eroding and/or any other method of metal removal or displacement is not allowed.

10.1.2.5 If these specifications do not say you can make a modification, then you cannot make a modification.

10.1.3 Specifications

10.1.3.1 Engine eligibility

10.1.3.1.1 The only engine permissible for the Junior Class is the Yamaha "J" engine.

10.1.3.1.2 Any alterations/modifications to the Yamaha "J" engine are strictly prohibited except as authorised in these rules.

10.1.3.1.3 Carburettor needle extensions are legal.

10.1.3.1.4 The use of thermal barrier coatings within the engine internally/externally on and in exhaust components is illegal.

10.1.3.1.5 The use of anti-friction coatings within the engine or on engine component is illegal.

10.1.3.1.6 No material may be added to the engine in any manner that affects a performance gain. The only material to be added is to repair an engine to the original manufacturer's specifications.

10.1.3.1.7 No material to be added to the crankcase in such a manner that reduces crankcase volume.

10.1.3.1.8 No material to be added to the ports or passages in such a manner that reduces volume in ports or passages.

10.1.3.2 Engine Displacement

10.1.3.2.1 The maximum bore size = 52.90mm.

NOTE: THIS DOES NOT SAY THAT 52.90MM PISTON IS LEGAL, THIS SAYS THAT THE MAXIMUM SIZE OF THE BORE IS TO BE NO MORE THAN 52.90MM. THIS EQUATES TO 110CC.

10.1.3.2.2 The maximum stroke = 50.05mm.

10.1.3.3 Cylinder Ports

10.1.3.3.1 All cylinder ports and passages including the crankcase passages, must be in 'as cast' condition. Any variation/modification from this will deem the engine illegal.

10.1.3.3.2 Maximum port width:

- Inlet = 30.6mm maximum
- Transfer = 24.45mm maximum
- Exhaust = 29.6mm maximum
- Track length
  - Maximum = 56.00mm
  - Minimum = 53.00mm

  This measurement is taken from the cylinder wall to the carburettor gasket face.

  This measurement includes gaskets either side of the phenolic spacer.

10.1.3.3.3 Maximum diameter of the inlet port at external cylinder face is to be 19.20mm.

10.1.3.4 Cylinder Head

10.1.3.4.1 Must be original OEM casting, Yamaha casting.

10.1.3.4.2 The welding and rematching of the combustion area, gasket face and spark plug surface is allowed.

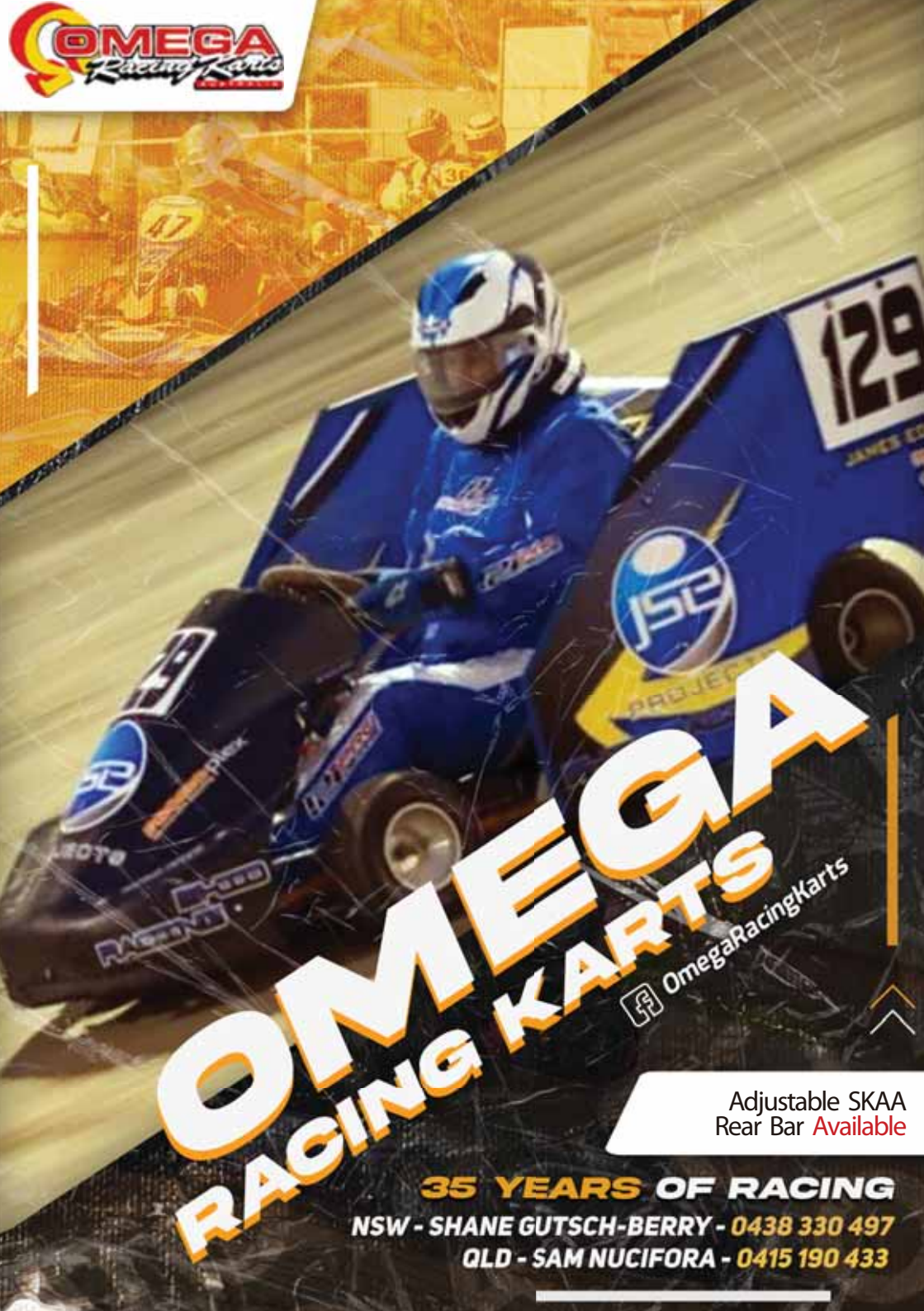
OMEGA
Racing Karts
OMEGA
RACING KARTS
OmegaRacingKarts
Adjustable SKAA
Rear Bar Available
35 YEARS OF RACING
NSW - SHANE GUTSCH-BERRY - 0438 330 497
QLD - SAM NUCIFORA - 0415 190 433

Hoosier

TIRE AUSTRALIA

www.hoosiertire.com.au

RANGE OF COMPOUNDS AVAILABLE TO SUIT EVERY FORM OF KART RACING FROM D10 THROUGH TO D50

2019 125 Open Australian Champion
Phil Perrott

2019 Junior Champion
Jac Laneyrie

Championship winning 5" and 6" Dirt Kart tyres

"TIRES DESIGNED FOR CHAMPIONS"

SHIPPING AUSTRALIA WIDE FROM

SYDNEY 02 9679 1990
SALES@HOOSIERTIRE.COM.AU

MELBOURNE 03 9338 7477
MELB@MDMOTORSPORT.COM.AU

10.1.3.4.3 Combustion chamber style is required to have a squish band and chamber which are visually concentric to the spark plug.

10.1.3.4.4 The combustion chamber/squish shall not protrude beyond the gasket sealing face of the cylinder head.

10.1.3.4.5 The spark plug thread may be repaired (i.e. recoil) and shall retain its original position.

10.1.3.4.6 The combustion chamber volume shall be a minimum of 11cc.

10.1.3.4.7 Spark plugs have a maximum engagement length of 20mm (without washer).

10.1.3.4.8 Head gasket must be retained.

10.1.3.5 Piston

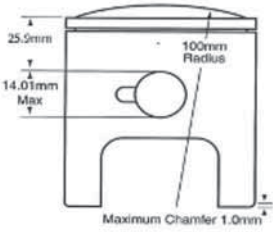

10.1.3.5.1 Piston must be approved and stock appearing.

- Yamaha,
- KSI,
- KSI MKII,
- JDP/Vertex,
- A.R.C. (forged and cast),
- Strike

10.1.3.5.2 Bottom of piston should be 90° to sides, with allowance of 1.0mm chamfer on the outside of the bottom face as per the diagram

10.1.3.5.3 It is permissible to notch the piston to allow the removal of circlip.

10.1.3.5.4 The piston skirt length may be machined, providing it conforms to the current specifications as laid down in these rules.

10.1.3.5.5 Minimum 25.9mm from the top of the gudgeon pin to outer edge of piston crown.

10.1.3.5.6 At no point, on the inside of the skirt (of a shortened piston), can the chamfer be greater than that allowed on the outside of the skirt i.e. 1.0mm.

10.1.3.6 Connecting Rods

10.1.3.6.1 Make and manufacturer can be either of the following:

(i) Yamaha (P/N 50W-11651-00, P/N 397-11651-00, P/N 787-11651-01 OR P/N 7F6-11651-02

OR

(ii) .KSI

10.1.3.6.2 No shot peening or polishing allowed

10.1.3.6.3 Length of rod will be:

- Maximum length = 100.13mm
- Minimum length – 99.87mm

The measurement is taken from centre to centre,

10.1.3.7 Crankshaft

10.1.3.7.1 Must be a stock Yamaha item with no modifications allowed.

EXCEPTION: bearing and seal may be hard chromed.

10.1.3.7.2 Minimum width to be 19.40mm across each wheel.

10.1.3.7.3 The minimum width from outside the wheel to outside of the other wheel is 48.80mm.

10.1.3.7.4 Minimum outside diameter is 92.70mm.

10.1.3.8 Crank Case

10.1.3.8.1 The crank case ports are to remain 'as cast'.

10.1.3.8.2 The minimum chordial diameter at the widest section of the transfer ports is to be 81.50mm.

10.1.3.8.3 It is permissible to repair bearing bores by welding or sleeving i.e. metal insert.

10.1.3.9 Ignition

10.1.3.9.1 Ignition must be external rotor type and OEM supplied.

10.1.3.9.2 Both CDI and TCI ignition units and stator coils are supplied by Yamaha are eligible.

10.1.3.9.3 No modifications or internal repairs to the black box control module or stator coils on the TCI and the CDI ignition system with the exception of the spark plug lead, which may only be repaired external to the black box.

10.1.3.9.4 No CDI unit shall vary more than 1° between 5,000 rpm and 10,000 rpm.

10.1.3.9.5 It is permissible to repair or replace the connector for CDI and TCI modules and mating wire.

10.1.3.9.6 Maximum inside diameter measurement of the ignition rotor to be 62.00mm.

10.1.3.9.7 The TCI rotor may be used as a replacement for the CDI rotor. Repolarising of the rotor is permitted.

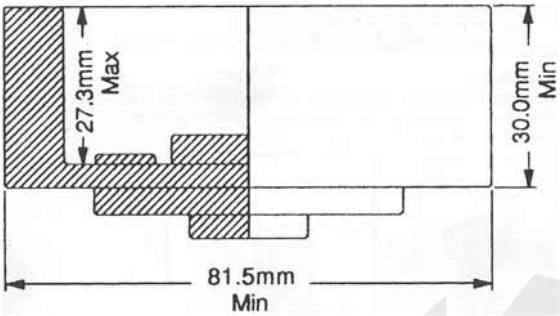

DIAGRAM IS FOR DIMENSIONAL REFERENCE ONLY

10.1.3.10 Carburettor

10.1.3.10.1 The only carburettor eligible for the Junior Class is the Walbro WB Series conforming to the following dimensions:

- Maximum venturi diameter is 24.13mm
- Maximum downstream diameter is 25.70mm
- Minimum carburettor length is 37.50mm

10.1.3.10.2 It is permissible to machine the WALBRO carburettor to:

i. Conform to dimension E

ii. Conform to dimension C

iii. Except an 'O' ring for the low speed jet and throttle shaft.

10.1.3.10.3 A threaded butterfly screw must be retained.

NOTE COUNTERSUNK SCREWS ARE NOT PERMITTED.

10.1.3.10.4 Butterfly and shaft must be as manufactured.

10.1.3.10.5 It is permissible to repair the inlet seat and throttle shaft bore.

10.1.3.10.6 It is permissible to enlarge only existing fuel/air holes.

NOTE: THEY MAY NOT BE DELETED OR RELOCATED.

10.1.3.10.7 All air must pass through the carburettor throat.

10.1.3.10.8 Measurement code

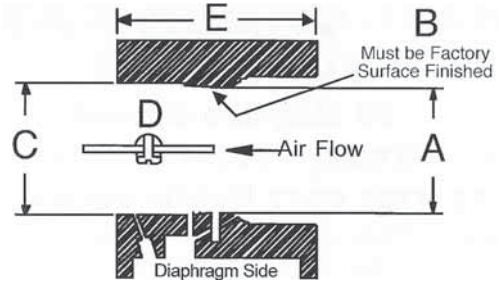

Measurement code:

As cast MAX Venturi diameter 24.13mm

As cast (area will extend from the front of the carburettor to the progression discharge jet which must have all or portion of this jet in the cast area.)

MAX downstream diameter 25.70mm.

Butterfly shaft must be located at the bore centre.

MIN carburettor body length of 37.50mm.

DIAGRAM IS FOR DIMENSIONAL REFERENCE ONLY

10.1.3.11 Phenolic Spacer

10.1.3.11.1 No machining.

10.1.3.11.2 Must remain as moulded.

10.1.3.11.3 Minimum length is 19.00mm.

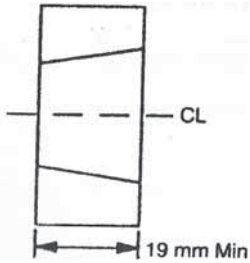

DIAGRAM IS FOR DIMENSIONAL REFERENCE ONLY

10.1.3.12 Exhaust Header Pipe

10.1.3.12.1 This item is not restricted to the original manufacturer but must completely conform to the type (style) and dimensional sizes of the original header pipe.

10.1.3.12.2 Inside diameter must be parallel.

10.1.3.12.3 Length must be a minimum of 120mm (as per diagram below)

10.1.3.12.4 Maximum inside diameter is 36mm.

10.1.3.12.5 Minimum inside diameter is 34mm.

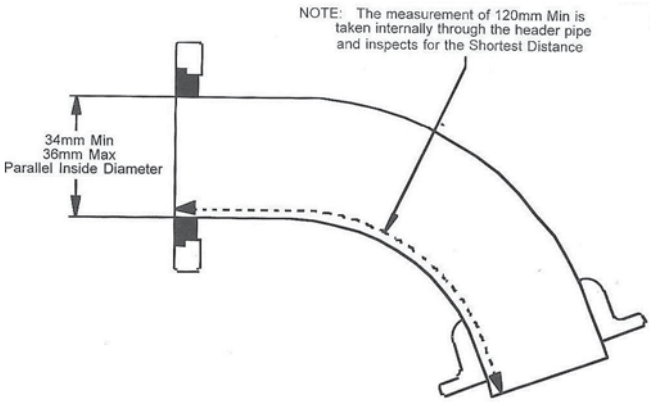

DIAGRAM IS FOR DIMENSIONAL REFERENCE ONLY

10.1.3.12.6 Modifications to fit exhaust gas temperature gauge or oxygen sensor are permissible.

10.1.3.13 Exhaust Pipe / Muffler

10.1.3.13.1 Make and manufacture is open but must be commercially available complying with the dimensions listed and detailed

10.1.3.13.2 The front cone of the exhaust is to be a minimum of 140mm long to a maximum of 190mm long.

10.1.3.13.3 The centre (belly section) between the front and rear cones must be parallel.

10.1.3.13.4 The centre (belly section) must have a minimum circumference of 278mm (88.50mm diameter).

10.1.3.13.5 The centre (belly section) must have a maximum circumference of 291mm (92.90mm diameter)

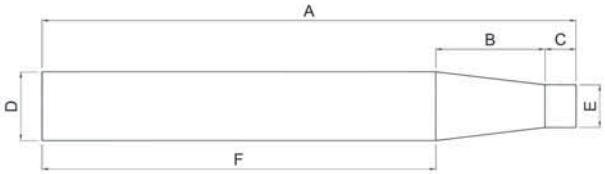

NOTE: ALL DIMENSIONS ARE MEASURED EXTERNALLY.

A = 685mm Max
B = 140mm Min. 190mm Max
C = 38mm Min.
D = 88.5mm Min. 92.5mm Max
E = 55mm Max
F = Must be Parallel

* Optional External Silencer Allowed
* 1 Only Internal Perforated Cone Allowed
* Exhaust to be Single Skin Only (Measurements B+F)
* Exhaust to be Parallel (Measurement F)

10.2 Technical Specifications – Sub-Junior Comer SW80

Sub-Junior Class only

Comer SW80 Series

Technical Specification

10.2.1 Purpose

The purpose of this Technical Specification is to provide clarity and consistency to all members regarding engine specifications for drivers and members of SKAA.

10.2.2 Scope

10.2.2.1 This procedure applies to all members of SKAA.

10.2.2.2 Unless otherwise specified, the engines must be original in all their components according to the Comer SW80 drawings.

10.2.2.3 This engine is approved for the use in Sub-Junior class only.

10.2.2.4 Any removal, addition or polishing of material is STRICTLY forbidden.

10.2.2.5 Sandblasting, glass bead blasting, peening, acid etching, spark eroding and/or any other method of metal removal or displacement is not allowed.

10.2.2.6 The use of thermal barrier coatings and/or ceramic coatings on or in the engine/engine components and on or in exhaust components is prohibited.

10.2.2.7 The use of anti-friction coatings on or in the engine/engine components is prohibited.

10.2.2.8 Any alterations/modifications are strictly prohibited except as specifically authorised within these specifications.

10.2.2.9 If these specifications do not say you can make a modification, then you cannot make a modification.

10.2.3 Specifications

10.2.3.1 Engine

Chrome Bore:	Bore:	Stroke:
No re-chroming or replating allowed	52.10mm	38.10mm maximum

10.2.3.2 Crankshaft/Conrod/Piston/Piston Rings/Piston Pin and Piston Pin Bearing

10.2.3.2.1 The piston skirt will carry a maximum chamfer of 0.5mm. NOTE: SKIRT LENGTH MUST BE EQUAL DISTANCE ON BOTH SIDES.

10.2.3.2.2 Piston pin bore is 8.00mm ± 0.10mm.

10.2.3.2.3 Cast surfaces to have a tolerance of ± 0.30mm.

10.2.3.2.4 Compliance checks:

10.2.3.2.5 The second piston ring must be freely removable from its groove and must be able to support its own weight when fitted to the cylinder that is held in a vertical position. The piston and ring must not be modified in any way that could possibly prevent the ring from moving freely in its groove.

10.2.3.2.6 Crankshaft can be hard chromed at bearing and seal surfaces.

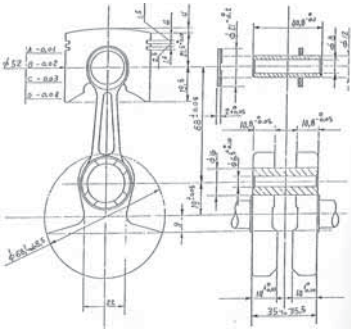

WEIGHT IN GRAMS	
USA spec piston inc. 2 x rings: 93- 98	
Piston ring(each): 3 – 4	Little End spacer (each): 2 – 4
Piston pin: 19 – 23	Complete crankshaft and piston (inc. 2 x rings, 2 x LE washers, LE cage, piston pin and 2 x circlips): 845 - 861
Piston pin needle bearing: 6 - 8	
	Flywheel complete: 645 – 675

10.2.3.3 Engine Additions

10.2.3.3.1 Engine Additions are any items from the following list:

Motor Mount; Cylinder/Head Temperature Probe (cover cooling slot may be modified for fitting as per DIAGRAM 3.3A); Tachometer; Carburettor jet needle extensions; Carburettor return springs and fasteners.

10.2.3.3.2 Engine must be run with supplied clutch (Part No. S080 089)

10.2.3.3.3 Either an 11 or 12 tooth Comer clutch drum can be used.

10.2.3.3.4 Clutch retaining nut/adapter nut is non-tech.

10.2.3.3.5 Fasteners securing clutch drum are free to facilitate the use of an external starter as long as components are no bigger than 19.00mm hexagon.

10.2.3.3.6 All components must be as supplied with engine and are all subject to technical specifications.

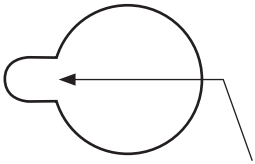

DIAGRAM 3.3A

Rotation position of slot is free. Maximum 1 slot only. Maximum slot width is 10mm.

10.2.3.4 Cylinder Head

10.2.3.4.1 Must be an original Comer casting.

10.2.3.4.2 The welding and re-machining of the combustion area, gasket face and spark plug surface is allowable. Any additions/repairs must be non-adjustable and of aluminium material.

AUSTRALIAN GO KART SPARES

GO KART PARTS
FOR ALL YOUR NEEDS

225 Clarke Road .Springvale South 3172, Victoria Australia
Phone: (03) 9546 5607 | Email: agskartparts@optusnet.com.au

www.agskartparts.com.au

RAAP RACING PIPES

RAAP RACING PIPES AND HEADERS TO SUIT YAMAHA KT100S AND YAMAHA KT100J ENGINES.

HAND MADE IN AUSTRALIA SINCE 1996.
AVAILABLE AT ALL LEADING GO KART SHOPS

TRADE AND DEALER ENQUIRES WELCOME EMAIL rob.mort@bigpond.com

10.2.3.4.3 The combustion chamber style is required to have a squish band and chamber that are visually concentric to the spark plug.

10.2.3.4.4 Comer SW80 Cylinder head volume measurement to be 11.00cc using the Comer SW80 cc plug gauge refer to the SKAA Manual for the correct usage procedure.

10.2.3.4.5 The combustion chamber/squish area shall not protrude beyond the gasket sealing face of the cylinder head.

10.2.3.4.6 The spark plug thread may be repaired and shall retain its original position in relation to crankshaft axis. Helicoils and similar are permitted.

10.2.3.4.7 Spark plug must have a maximum engagement length of 12.70mm (without the washer).

10.2.3.4.8 Maximum distance from sealing surface of spark plug to combustion chamber sealing face shall be 23.00mm.

10.2.3.4.9 The cylinder head 'O ring' must be retained.

10.2.3.5 Carburettor

10.2.3.5.1 Tillotson HL 326A or HL 166B with a Venturi of 15.87mm maximum. Carburettor to be stock as supplied by Comer™ and the choke is to remain attached. The back edge of the choke butterfly may be bent to allow the leading front edge to be in the fully open position. No additional machining or polishing of any cast surface. This includes throat, venturi, etc., of carburettor. All screws etc., to remain as supplied by Manufacturer. Gasket and Diaphragm kits are free. REFER TO DIAGRAM 3.5A.

The carburettor on the left with the 'location lug hole' and larger 'pulse hole' DOES NOT COMPLY to the current SKAA Manual or these Comer SW80 Technical Specifications and cannot be used in any SKAA sanctioned event.

DIAGRAM 3.5A

10.2.3.5.2 The airbox adaptor shall be stock as supplied by Comer™, or a replica manufactured to Comer™ specifications. REFER TO DIAGRAM 3.5B.

10.2.3.5.3 Maximum airflow opening is 25mm. All other dimensions have a ± 1mm tolerance.

10.2.3.5.4 Adjustment of carburettor jet needles must be done by manually turning the jet needle (or its extension) only.

10.2.3.5.5 Carburettor throttle cannot be actuated by electro-mechanical means.

10.2.3.5.6 It is permissible to fit a mechanical stop to limit the range of carburettor jet needle movement, however, no modifications to the carburettor are permitted to mount such a stop.

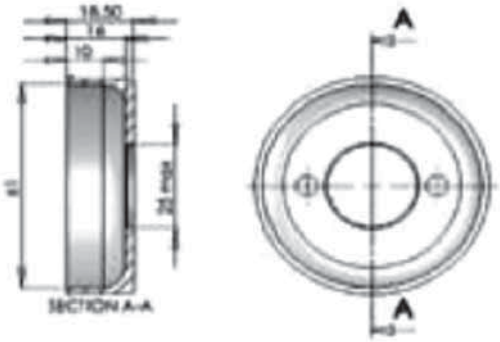

DIAGRAM 3.5B

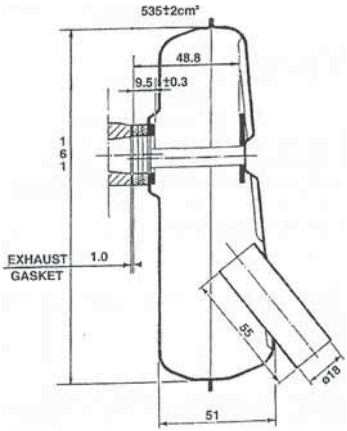

DIAGRAM 3.7A

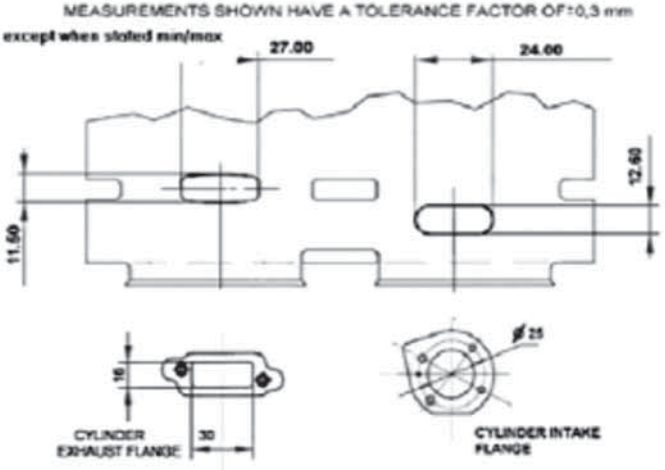

DIAGRAM 3.7B

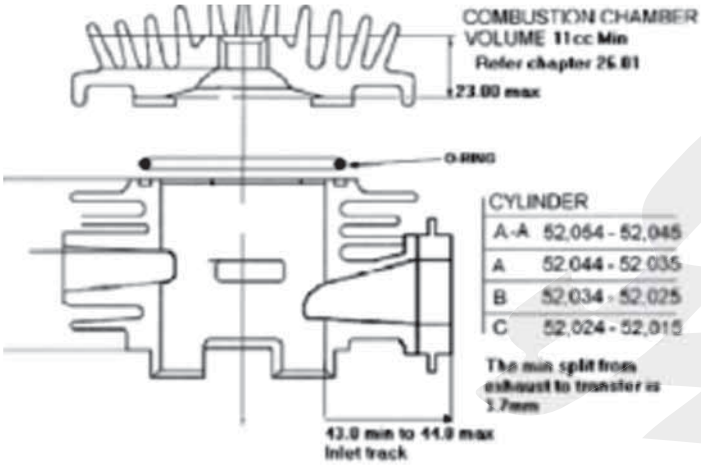

DIAGRAM 3.7C

10.2.3.6 Pressurised Fuel Systems

10.2.3.6.1 Fuel pump or pressurised fuel systems are forbidden.

10.2.3.6.2 Squeeze type pump between fuel tank and carburettor is permitted.

10.2.3.7 Exhaust Gasket and Inlet Manifold Gasket

Specifications and tolerances are as the following diagrams, otherwise if no tolerance is specified then ± 0.15mm applies.

10.2.3.8 Exhaust

10.2.3.8.1 Engine must be run with muffler, must be OEM (original engine manufacturer) (Part No. S60 5500 07).

10.2.3.8.2 With the exception of repair to fixing points, any attempt to repair damage by cutting, welding or fabrication will automatically remove eligibility of the exhaust unit.

10.2.3.8.3 The exhaust stinger will have a maximum tube internal diameter 18.50mm.

10.2.3.8.4 A maximum of 1 Exhaust Probe/Fitting is permitted. The maximum diameter of the probe is 6mm.

10.2.3.9 Ignition

Ducati/Bosch KDT

a. Is slotted for adjustment.

b. Ignition timing may be adjusted by either slotting of the ignition backing plate and/or removal of the locating key or part thereof.

c. Spark plug cap is a non-tech item.

d. After market ingnition coil by Stihl, Part# 2204211052 is allowed.

10.2.3.10 Engine Fan

The dimensions of the detachable plastic finned rotor fan (Part No. S60 9690 02) are to be 125mm diameter by 37.7mm minimum width and this finned rotor fan cannot have any fins missing or not be completely intact. Must be OEM.

10.2.3.11 Crankcase and Cylinder – surfaces including gaskets

10.2.3.11.1 As per the Specifications and Tolerances in DIAGRAMS 3.11 A-D, the crankcase ports will remain as cast.

10.2.3.11.2 All machined surfaces may be re-matched as long as engine is within any other specifications within the rules.

10.2.3.11.3 It is permissible to repair crankcase main bearing recesses by welding or with metal inserts.

10.2.3.12 Gaskets

All gaskets to be used at all times and conform to the measurements on the diagrams, with the exception of the cylinder base gasket which is dimensionally free, but a gasket(s) must be used.

10.2.3.13 Cooling Holes

It is permissible to add extra holes for better cooling efficiency. These holes are to be 2 rows of 5 holes, maximum 13mm diameter in the front panel alongside the ON/OFF switch and 1 row of 5 holes, maximum 13mm diameter in the opposite rear panel. These holes may be covered or uncovered. No additional cooling devices are permitted.

DIAGRAM 3.11A

DIAGRAM 3.11B

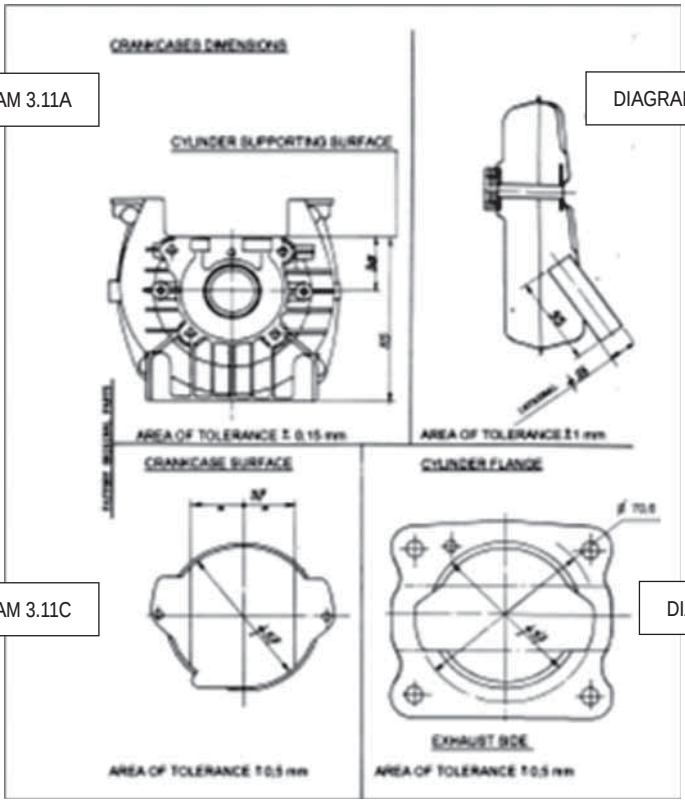

DIAGRAM 3.11C

DIAGRAM 3.11D

10.2.3.14 Clean Holes

The air holes in the cord start panel are to be kept clean and clear at all times, except for normal dirt such as can be accumulated during a race.

10.2.3.15 Pulse Hole

The maximum pulse hole diameter in the barrel and plastic carburettor adaptor is to be 3mm diameter.

10.3 Technical Specifications – Standards

Standard Class

Yamaha KT100S Series

Technical Specification

10.3.1 Purpose

The purpose of this Technical Specification is to provide clarity and consistency to all members regarding engine specifications for drivers and members of SKAA.

10.3.2 Scope

10.3.2.1 This procedure applies to all members and drivers of SKAA.

10.3.2.2 Unless otherwise specified, the engines must be original in all their components according to the Yamaha KT100S drawings.

10.3.2.3 Any removal, addition or polishing of material is STRICTLY forbidden.

10.3.2.4 Sandblasting, glass bead blasting, peening, acid etching, spark eroding and/ or any other method of metal removal or displacement is not allowed.

10.3.2.5 Any alterations/modifications are strictly prohibited except as specifically authorised within these specifications.

10.3.2.6 If these specifications do not say you can make a modification, then you cannot make a modification.

10.3.3 Specifications

10.3.3.1 Engine Eligibility.

a) Yamaha KT 100S

b) No hybrids (i.e. no A.R.C. cylinders on Yamaha casings, no interchanging of parts between electric start Yamaha and non-electric start Yamaha).

c) Yamaha KT 100S Electric start.

10.3.3.2 Internal Additions

10.3.3.2.1 No additional material may be added except in the case of engine repairs and shall only restore engine components to original specifications. The cylinder may NOT be repaired in any of the port or passage ‘as cast’ areas.

10.3.3.2.2 The use of thermal barrier coating/ceramic coatings on or in the engine/ engine components and on or in exhaust components is prohibited.

10.3.3.2.1 The use of anti-friction coatings on or in the engine/engine components is prohibited.

10.3.3.3 Legal Additions

10.3.3.1 Legal additions shall be limited to the following:

- chain guard
- extension of carburettor jet needles
- carburettor return springs
- temperature gauge
- tachometer
- motor mount
- direct drive gear
- third bearings and adapter
- oxygen sensor; and

10.3.3.3 Displacement

10.3.3.3.1 Maximum engine displacement shall be 100cc + 10% = 110cc

10.3.3.3.2 The maximum bore size = 55.10mm.
NOTE: THIS IS THE BORE SIZE NOT PISTON SIZE.

10.3.3.3.3 The maximum stroke = 46.13mm.

10.3.3.4 Cylinder

10.3.3.4.1 All ports are to be 'as cast'.

10.3.3.4.2 No grinding is permitted to remove casting irregularities at the junction.

10.3.3.4.3 No chamfer on port edges is permitted.

10.3.3.4.4 This rule does not allow grinding or alterations by any method to:

- change the roof angle.
- alter port height, angle or width.
- change the shape or size of the passages from the cylinder base to the port.
- match the cases to the port passages

Sandblasting, glass beading, shot peening, spark erosion etc., ARE NOT a substitute for 'as cast' condition.

NOTE 1: Due to manufacturing procedures, it is possible that some engines may have slightly broken port edges. When this exists, it is uniform on all port edges (tops, bottoms, sides) of all ports in the cylinder. The intersection of the port edges and the cylinder wall must still be within the Technical Measurements. As the bore size increases, the amount of 'break' diminishes. If the cylinder bore 52.45mm or larger, no 'broken' edges are allowed.

NOTE 2: Due to manufacturing procedures, some KT 100SD, KT 100SE cylinders have some minor grinding on the transfer divider bridges and some evidence of casting irregularities removed in transfer passages, this includes the transfer area in the crankcase.

10.3.3.5 Cylinder Head

10.3.3.5.1 Must be original OEM casting only, Yamaha casting.

10.3.3.5.2 The welding and rematching of the combustion area, gasket face and spark plug surface is allowed.

10.3.3.5.3 Combustion chamber style is required to have a squish band and chamber which are visually concentric to the start plugs.

10.3.3.5.4 The combustion chamber/squish are shall not protrude beyond the gasket sealing face of the cylinder head.

10.3.3.5.5 The spark plug thread may be repaired (i.e. recoil) and shall retain its original position.

10.3.3.5.6 The combustion chamber volume shall be a minimum of 11cc.

10.3.3.5.7 Spark plugs must have a maximum engagement length of 20mm (without washer).

10.3.3.5.8 Head gasket must be retained.

10.3.3.6 Piston

10.3.3.6.1 Must be stock appearing

10.3.3.6.2 Pistons must be:

- Yamaha,
- KSI,
- KSI MKII,
- JDP/Vertex,
- A.R.C. (forged and cast),
- Strike

10.3.3.6.3 Bottom of piston should be 90° to sides, with allowance of 1.0mm chamfer on the outside of the bottom face as per the diagram. At no point, on the inside of the skirt (of a shortened piston), can the chamfer be greater than that allowed on the outside of the skirt i.e. 1.0mm.

10.3.3.6.4 It is permissible to notch the piston to allow the removal of circlip.

10.3.3.6.5 The piston skirt length may be machined, providing it conforms to the current specifications as laid down in these rules.

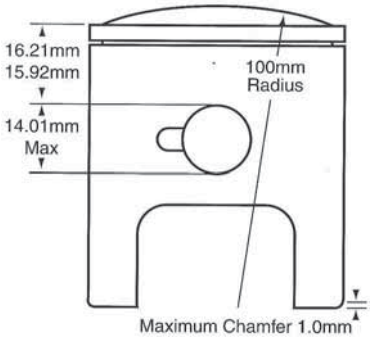

Diagram is for Dimensional reference only.

10.3.3.6.3 Bottom of piston should be 90° to sides, with allowance of 1.0mm chamfer on the outside of the bottom face as per the diagram. At no point, on the inside of the skirt (of a shortened piston), can the chamfer be greater than that allowed on the outside of the skirt i.e. 1.0mm.

10.3.3.6.4 It is permissible to notch the piston to allow the removal of circlip.

10.3.3.6.5 The piston skirt length may be machined, providing it conforms to the current specifications as laid down in these rules.

10.3.3.7 Connecting Rod

10.3.3.7.1 Must be stock and from the following list:

- Yamaha,
- KSI KT100

NOTE: NO 'J' RODS ALLOWED.

10.3.3.7.2 Rod length

- Minimum length 99.87mm
- Maximum length 100.13mm

Measured centre to centre.

10.3.3.7.3 Conrod alignment may be either top or bottom.

10.3.3.7.4 Connecting rod must be of magnetic material.

10.3.3.8 Crankshaft

10.3.3.8.1 Must be Yamaha.

10.3.3.8.2 Outside diameter measurement:

- Maximum diameter is 87.25mm.
- Minimum diameter is 86.60mm.

10.3.3.8.3 Crank pin to be a standard hollow pin.

10.3.3.8.4 Crankshaft shoulder width to a minimum 10.80mm.

10.3.3.8.5 Crankshaft halves to a minimum 8.84mm apart from inside faces.

10.3.3.8.6 Crankshaft halves to be a minimum 45.59mm apart from outside faces.

10.3.3.9 Crank Case

10.3.3.9.1 The crank case ports are to remain 'as cast'.

10.3.3.9.2 The minimum chordial diameter at the widest section of the transfer ports is to be 97.50mm.

10.3.3.9.3 Existing crank cases that are narrow may be spaced with a thicker gasket.

10.3.3.9.4 Main bearing bores can be repaired with metal inserts.

10.3.3.10 Ignition

10.3.3.10.1 Ignition must be that supplied by the original engine manufacturer.

10.3.3.10.2 The use of the following TCI Module is permissible.

- YAMAHA
- VICTA
- ATOM
- DELTA/WEI SHIEH
- PRD
- PRD WITH COIL

10.3.3.10.3 No modifications or repairs to any of the listed modules are permissible.

10.3.3.10.4 The fitting of a PRD ignition coil and PRD ignition rotor (flywheel) is permitted.

PRO KART SOLUTIONS

Pro Kart Solutions
100cc All Power
Nationals

Olympic Park Mildura

www.allpowernationals.com

Or find us on FAcebook

Mildura Rural City Council

SUNRAYSIA Speedway Karters

The Red Cliffs Club

Cairns Speedway Karts INC

cairnsspeedwaykarts@gmail.com

Located in Cairns Far north Queensland we are fortunate to be able to run 2 tracks, Cairns International Speedway and Mareeba Speedway which are both great racks to run on. We have had drivers from Brisbane who have said “they love the track”. Our racing season runs from May through to early December.

We are a local family friendly club who loves to have fun while racing, making friendships along the way.

Jump onto our Facebook Cairns speedway karts and like our page and follow our journey.

10.3.3.10.5 Ignition timing may be adjusted by the removal of the locating key or part thereof.

10.3.3.10.6 All engines must rotate in a clockwise direction when viewing from the drive side.

10.3.3.10.7 Ignition/Rotor covers are optional.

10.3.3.11 Carburettors

10.3.3.11.1 Must be WALBRO WB series conforming to the dimensions as per diagram.

10.3.3.11.2 WB24 is not eligible.

10.3.3.11.3 It is permissible to machine the WALBRO carburettor to:

iv. Conform to dimension E

v. Conform to dimension C

vi. Except an 'O' ring for the low speed jet and throttle shaft.

10.3.3.11.4 A threaded butterfly screw must be retained.

NOTE: COUNTERSUNK SCREWS ARE NOT PERMITTED.

10.3.3.11.5 Butterfly and shaft must be as manufactured.

10.3.3.11.6 It is permissible to repair the inlet seat and throttle shaft bore.

10.3.3.11.7 It is permissible to enlarge only existing fuel/air holes.

NOTE: THEY MAY NOT BE DELETED OR RELOCATED.

10.3.3.11.8 All air must pass through the carburettor throat.

10.3.3.11.9 Measurement code

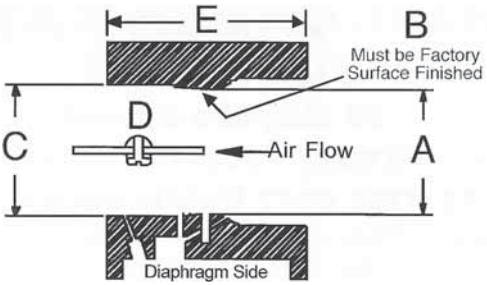

Measurement code:

A. As cast MAX Venturi diameter 24.13mm

B. As cast (area will extend from the front of the carburettor to the progression discharge jet which must have all or portion of this jet in the cast area.)

C. MAX downstream diameter 25.70mm.

D. Butterfly shaft must be located at the bore centre.

E. MIN carburettor body length of 37.50mm.

DIAGRAM IS FOR DIMENSIONAL REFERENCE ONLY

10.3.3.12 Inlet Tract

10.3.3.12.1 Inlet tract 65mm minimum and is to be measured from aluminium carburettor adapter outer face to the skirt of the piston.

10.3.3.12.2 There is to be no grinding, polishing or hand finishing of the port, manifold or spacer.

10.3.3.13 Phenolic Spacer

10.3.3.13.1 Hole size is 26.42mm maximum.

10.3.3.14 Aluminium Mount Plate

10.3.3.14.1 Hole size is 26.29mm maximum.

10.3.3.15 Exhaust Header Pipe

10.3.3.15.1 This item is not restricted to the original manufacturer but must completely conform to the type (style) and dimensional sizes of the original header pipe.

10.3.3.15.2 Inside diameter must be parallel.

10.3.3.15.3 Length must be a minimum of 120mm (as per diagram below)

10.3.3.15.4 Maximum inside diameter is 36mm.

10.3.3.15.5 Minimum inside diameter is 34mm.

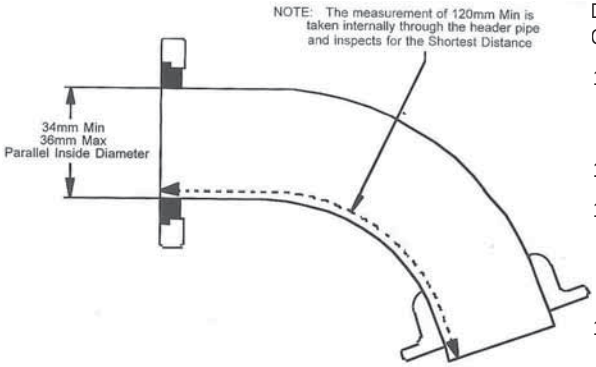

DIAGRAM IS FOR DIMENSIONAL REFERENCE ONLY

10.3.3.15.6 Modifications to fit exhaust gas temperature gauge or oxygen sensor are permissible.

10.3.3.16 Exhaust Pipe / Muffler

10.3.3.16.1 Make and manufacture is open but must be commercially available complying with the dimensions listed and detailed

10.3.3.16.2 The front cone of the exhaust is to be a minimum of 140mm long to a maximum of 190mm long.

10.3.3.16.3 The centre (belly section) between the front and rear cones must be parallel.

10.3.3.16.4 The centre (belly section) must have a minimum circumference of 278mm (88.50mm diameter).

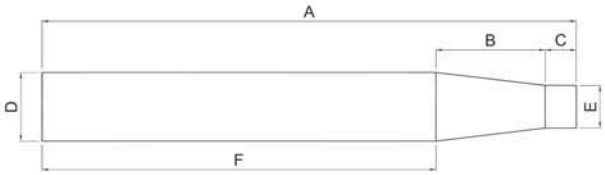

10.3.3.16.5

The centre (belly section) must have a maximum circumference of 291mm (92.90mm diameter)

NOTE: ALL DIMENSIONS ARE MEASURED EXTERNALLY.

A = 685mm Max
B = 140mm Min. 190mm Max
C = 38mm Min.
D = 88.5mm Min. 92.5mm Max
E = 55mm Max
F = Must be Parallel

* Optional External Silencer Allowed
* 1 Only Internal Perforated Cone Allowed
* Exhaust to be Single Skin Only (Measurements B+F)
* Exhaust to be Parallel (Measurement F)

10.3.3.17 Electric

Start Yamahas

10.3.3.17.1 Must run operational starter.

10.3.3.17.1 Engine must be able to turn over its own power with the drive wheels raised.

10.3.3.18 Clutches

10.3.3.18.1 Clutches are optional.

10.4 Technical Specifications - 4-Stroke

4-Stroke 6.5hp Series

Technical Specification

10.4.1 Purpose

The purpose of this Technical Specification is to provide clarity and consistency to all members regarding engine specifications for drivers and members of SKAA.

10.4.2 Scope

10.4.2.1 This procedure applies to all members and drivers of SKAA.

10.4.2.2 Unless otherwise specified, the engines must be original in all their components according to the [?] drawings.

10.4.2.3 Any removal, addition or polishing of material is STRICTLY forbidden.

10.4.2.4 Sandblasting, glass bead blasting, peening, acid etching, spark eroding and/or any other method of metal removal or displacement is not allowed.

10.4.2.5 Any alterations/modifications are strictly prohibited except as specifically authorised within these specifications.

10.4.2.6 If these specifications do not say you can make a modification, then you cannot make a modification.

10.4.3 Specifications

This Class is a Club Class and is not eligible for State or National Titles.

This Class is a single engine class which may be used by the following Classes:

- Sub-Junior (80kg) 7 – 9 years
- Junior (120kg) 9 – 16 years
- Senior (130kg) 16 years and over

10.4.3.1 Engines – Single Class 6.5hp 4 Stroke

Must be 6.5hp Honda (Part# GX200 QXU) or clone limited to the following brand and part number.

(i) "TWM Imports" – Part # QPE65

Only electric start options on the above motors will be acceptable.

10.4.3.1.1 Engine must remain in standard form with no performance enhancing parts – with the following exceptions only. All internal specifications must remain as 'manufacturer's specification' with no "Performance Enhancing" additions.

(i) no modification, adaptation or removal of parts from the 6.5hp intake manifold and base;

(ii) air filter must be original, the genuine Honda element or the after-market air cleaner made by Bynorm™ Part # 320-087 with recommended pre-filter part # 320-039.

(iii) no alteration via “off set” keyways; or keyway removal;

(iv) no porting and/or polishing of any surfaces allowed;

(v) no removal of material such as the machining of the cylinder head/block to increase compression;

(vi) head and side cover to be tagged at all times and to remain standard;

(vii) no header pipes allowed;

(viii) the use of transfer crank case gear boxes is not permitted.

NOTE: ANY “GREY AREAS” SHALL BE SEEN BY THE SCRUTINEER AS AN INFRINGEMENT OF THE RULES.

10.4.3.1.2 New engines must be presented as boxed to the Club nominated Scrutineer, Engine Builder or other authorised person for scrutineering prior to fitting to the kart for the first time. Engine is to be presented for scrutineering and tagging any time the engine has undergone maintenance or repair prior to remounting or racing.

10.4.3.1.2.1 Exceptions

(i) disconnection and/or removal of Governor;

(ii) disconnection and/or removal of oil pressure switch;

(iii) Club approved/manufactured exhaust manifold and pipe only. Pipe must not exceed 6”/152mm in length from flange to tip. This measurement does not include muffler. Be positioned to stay clear of driver and seat.

(iv) standard barrel type muffler together with the Club approved/manufactured exhaust pipe and manifold.

NOTE: MUST BE AN EFFECTIVE SPARK ARRESTOR WITH MAXIMUM NOISE LEVEL 95DBA. NO DRILLING OF MUFFLER ALLOWED.

(v) remote Pulse Pump with isolated fuel tank, must be used to service standard carburettor. Pump must be of a vacuum type and no greater than 3psi.

(vi) relieving of, or changing carburettor main jet is permitted (no adjustable main jets allowed);

(vii) all engines must be tagged by the Club Scrutineers;

(ix) machining or boring of cylinder only, is allowed in reconditioning to the next available oversize piston and not to exceed 0.020”.

(x) Ports and valves must remain standard.

10.4.3.1.2.2 Minimum weights for 4 strokes

(i) Sub-Junior 80kg

(ii) Junior 120kg

(iii) Senior 130kg

11.0 By-Laws*

*Also known as Operational Rules

By adopting and developing by laws and policies, it gives our organisation the framework to guide the day to day action on the job. The benefits of having these are:

- so people working in our organisation can have a framework for action that helps them get on with the job they need to do.
- so people in the organisation don't have to keep on discussing and re-discussing the same issues every time they arise – one thought out decision can be applied to many similar cases – efficiency.
- so legal and other requirements can be met.
- as a tool in quality improvement.
- to comply with accreditation standards.

DEFINITIONS

Association – Speedway Karting Association of Australasia Inc.

Club – refers to a club which is incorporated in their own state, who are affiliated with the Association.

Driver – Fully paid up driver of any club currently affiliated with SKAA, who has purchased an SKAA log book and paid the driver subscription fee, regardless of age. In the case of a driver under the age of 18, these rules will also apply to their legal guardian.

Guest – Persons who are competing, crewing or assisting during an association or SKAA or SKAA club promoted event. This includes all Social Members of SKAA Affiliated Clubs.

Member – is a delegate of an affiliated club who is represented on the SKAA Committee.

SKAA – Speedway Karting Association of Australasia (our ruling body)

SKAA Representative – The acting Agent of each club, as voted by their club, to attend SKAA meetings and communicate and act with the SKAA on the club's behalf.

Hot Zone – Any area where a kart may have an engine running during competition times. This includes the racetrack, dummy grid, off grid and engine start area.

Pit Area – Includes all areas as fenced and marked, and may include areas designated as a "Hot Zone"

SECTION 1. General Requirements

1.1 These By-laws and rules apply to all Drivers and Guests of any club currently affiliated with SKAA

1.2 The Association Colours shall be Blue and Red, with Yellow plates and green numbers to signify National Title Championships. The following shall be the state plate colours:

Tasmania – Green with yellow numbers
Queensland – White with Maroon numbers
Victoria – Light Blue with White numbers
South Australia – Red with White numbers
Northern Territory – Black with Orange numbers
New South Wales – Yellow with Red numbers
Western Australia – Yellow with Black Numbers

1.3 Business Activities. No driver or guest shall carry on his or her profession or business within the association or at any venue hosting an SKAA event, without the express permission of the Executive Committee, or appoint the use of any Club or Association venue by advertisement or otherwise as a business address or facility.

1.4 Removal of Club Property. No driver or guest shall take away from the Association any of its property other than as authorised by the Association President.

1.5 Property. Drivers and guests shall be required to pay for any of the Association's property they destroy or damage. The cost of replacing or repairing such loss or damage shall be determined by the Executive Committee, whose decision shall be final.

1.6 Pets. All Pets are not allowed in any Venue hosting any SKAA event. Assistance dogs are excluded from this by-law.

1.7 Dress Requirements. Drivers and Guests shall meet the minimum dress requirements as noted in the Speedway Racing Rules & Regulations during competition times.

1.8 Juveniles in Bar Areas. Juveniles are allowed in Bar areas only when accompanied by and under the control of a parent or guardian.

1.9 Smoking. Smoking is not permitted within the enclosed areas of any Venue buildings, and in the pit areas during competition times.

1.10 Respect: Drivers and guests shall treat each other with respect at all times when performing any act that relates or refers to the SKAA.

1.11 SKAA Identity. All Go-Karts used at an event conducted using the SKAA Rules, shall be referred to as "Speedway Karts".

1.12 SKAA Representatives & Voting. Each club shall nominate up to two (2) person as their representatives. Each club shall have one vote only.

1.13 Communication. Email and other official communication is to be directed to the SKAA Representative and Secretary for each club, Representatives and secretaries are both authorised to contact the Association directly. Anything official must be in writing, including email.

1.14 Resolutions. A time frame for the application of any resolution must accompany that resolution, as well as the persons responsible for actioning any resolution. Any issue being raised and defeated in two consecutive years, will not be eligible to be presented at the next Annual Conference, unless it is a safety issue.

1.15 Decision Making. All decisions made by the SKAA executive are to be done impartially and in an unbiased way. Questions regarding the interpretation of any rules by the executive are to be recorded and documented appropriately and tabled for further discussion at the next conference.

SECTION 2. Competition

2.2 Pit Crew. Each driver is responsible for their Pit Crew. This includes behaviour, dress standard, ensuring they are properly insured and their safety.

2.3 Volunteers. All executive, officials and event helpers are Volunteers, who are doing their best to ensure that clubs, drivers and guests have as pleasant experience as possible. They are to be treated with respect and not abused in anyway. Drivers and guests are reminded to use the appropriate channels if they have a grievance, as the SKAA has zero tolerance for any person abusing a volunteer.

2.4 Refusal of Entry.

2.4 a) SKAA has the only right to refuse a driver entry to any SKAA event at any time.

2.4 b) SKAA has the right to refuse entry to the association of any club wishing to affiliate with the SKAA.

In both 2.4 a) and 2.4 b) above, no reason need be given. Refusal for 2 consecutive race seasons would indicate a lifetime refusal.

2.5 Race Meeting Conduct

2.5 a) SKAA will at all times adhere to all policies, rules and regulations as published by Speedway Australia first and foremost, unless a written dispensation has been obtained.

2.5 b) All competitors, crew, officials and volunteers at an SKAA Blue Ribbon event, or any event hosted by an SKAA affiliated club which is conducted via these rules must be covered by Speedway Australia Insurance, and be licenced accordingly.

2.5 c) All affiliated clubs must adhere to the SKAA Kart and Engine Formulae Rules as well as the Speedway Australia Racing Rules and Regulations when conducting their race meetings. Approval must be sought from SKAA for any variations.

2.6 Drugs & Alcohol. Executive Committee, drivers, guests and all volunteers must be prepared to pass a drug and alcohol test at any time during competition, as per the Speedway Australia Drug & Alcohol Policy. If at any time an individual may suspect they are unable to pass such a test, they should withdraw from the "Hot Zone" and Pit Area immediately.

2.7 Junior to Senior Transition. Clubs are to recognise that a driver moving from a Junior to Senior SKAA Division must start Rear of Field for their first 2 race meetings and must be signed off as competent to start in the Draw by a Level 1 or 2 SKAA Steward.

2.8 Supplementary Regulations. Supplementary Regulations to any event conducted by an SKAA affiliated club using the SKAA Rules are not to be used to alter any kart formulae or engine specifications, unless prior written approval from SKAA has been secured. Any such approved deviation must be notified to all participants prior to travel time.

2.9 Numbering System. All clubs to be responsible for administering their own kart numbering system. SKAA has approved a club prefix. The Prefix must be included with the numbers.

2.10 Title Documents. All state and national title nomination documents are to be prepared from a Pro-Forma document as published by the SKAA Secretary.

2.11 Track Grading at Titles. Track grading is to be avoided during Title events unless a safety issue. Appropriate track preparation equipment and experienced operators are to be available to rework the track if necessary.

2.12 One Way Communicators. One Way Communicators (Raceivers) are mandatory.

2.13 Log Books. The Chief Steward holds the log books until the completion of racing.

2.14 Substitution. Chassis substitution is permitted without penalty as a result of a chassis being damaged beyond repair. The substitute chassis must be scrutineered before being used.

2.15 Silver Card. Speedway Australia will award one silver card to the winner of each class at the National Title.

2.16 Notifications. Where a club chooses to receive the Speedway Australia Officials Licence notifications, rather than the SKAA, they must forward that email notification to the SKAA Secretary as soon as possible for SKAA approval. Clubs are not to approve officials without first contacting the Speedway Australia licencing officer.

2.17 Title Stewards. A SKAA approved Level 1 Steward must be in charge of State and National Titles.

2.18 Method of starting Karts. The method of starting direct drive karts is to be by push quad only, unless directed by the Chief Steward. This does not apply to those with push button, gearbox or are 'easystart'.

2.19 Junior Training Manual. All juniors are to participate in the Speedway Australia ""Kids to Grids" program, and or SKAA accredited training program were required.

2.20 Title Qualifications. The date range for qualification for State and National Title events is 12 months prior to the published close of nomination date, regardless of the time of year. Qualification for title events to be 'on track' participation in any two SKAA race meetings (State and National Titles included, on an annual Speedway Australia licence).

2.21 Minimum Subscription for State and National Titles. Shall be 6 karts for all Senior Classes, there is no minimum subscription for Junior Classes.

2.22 Club Events and State and National Titles. No club event shall be scheduled in the same state against a state title on the same weekend. No Club even shall be scheduled anywhere against the National Title Weekend.

2.23 Online Nominations. All online state and national title nomination documents require approval from SKAA prior to being distributed.

2.24 Awarding of the National Title. Is to be awarded at least 2 years in advance, and to be held in the months of March/April/ May, with consideration for seasonal conditions.

2.25 Hosting of the National Title. The SKAA will run and control the National Title, in conjunction with the Host Club.

2.26 Scrutineering. All karts presented for scrutineering must be presented on a suitable trolley of adequate height.

SECTION 3. SKAA Principles (July 2010, unless specified)

3.1 The SKAA will administer 2 stroke and 4 stroke engines on a go-kart chassis. We will not administer to classes requiring a roll cage.

3.2 4 stroke and 2 stoke karts are not to mix, unless otherwise approved by SKAA

3.3 A 'Speedway' track which hosts an SKAA event must have left hand corners only. No alternate corners.

3.4 New classes are not to be included at SKAA events until all rules are finalised and engine compliance checks are in place to the satisfaction of the SKAA.

3.5 The SKAA must at all times: keep rules as simple as possible, make rules in regards to fairness for ALL drivers, and consider safety as a top priority.

3.6 State and National Titles are to be conducted as per the SKAA Guidelines document, with the only variations permitted being:

a) Environmental issues. For Example: noise, dust, tear off disposal etc.

b) Promoted class (subject to minimum subscription).

3.7 Title Sashes and Plates are to be supplied by SKAA. Participation medallions are to be provided by SKAA for all Junior competitors for the National Title only.

SECTION 4. Altering By-Laws

4.1 Annual Review: All By-Laws are to be reviewed at the next AGM. At which time, the Committee may make any alterations that they see fit for the following race season. Any alterations must be by majority.

4.2 All items within Section 4, apply to every Section, including Section 4.

4.3 Alterations Mid-Season: Alterations required during the race season may be made via a Special Resolution at any Executive Meeting, providing a minimum of 15 days' notice has been served to the committee members, and the vote is a clear majority. The executive meeting may be conducted using electronic means, provided that all those listed as being on the Executive Committee, and all SKAA reps have an equal opportunity to vote, as per Rule 1.12.

4.4 Club Member Request: Members and Guests may request an alteration to these By-Laws at any time. All requests MUST be in writing and addressed to the Association Secretary. The alterations must have been discussed by the member or guests host club and have be accompanied by a letter of recommendation from the club and as many supporting documents as possible. Alterations can be submitted by a club secretary only, not directly from the member or guest. The Committee MUST discuss the request within 15 days. If the alteration refers to a safety issue, the alteration will be referred directly to the Technical Committee and a time frame for resolution set. If the alteration does not refer to a safety issue, the alteration and supporting documents will be tabled for consideration at the following conference, with a copy forwarded to all clubs prior the conference. The closing date for alterations to be considered at the next conference is one month prior to the published conference date.

4.6 Alteration Notification: All SKAA affiliated Clubs will be notified within 30 days of any alteration to By-Laws.

4.7 Implementation: All Alterations of the By-Laws and Kart Formulae will come into effect 1st July the following Season, unless a safety issue, which will be implemented immediately.

Trophies, Awards, Medals, Metal Cups

Engraving, Etching on Glass & Metal

Name, Button & School Badges

Promotional and Gift Items

Plaques, Shields, Perpetuals

Great range of metal pens

★★★★★

Mention SKAA for 10% discount on your TROPHY order.

We deliver Australia wide

(03) 5278 6202

sales@allsporttrophies.com.au

33 Seaside Parade, North Shore, 3214

Geelong, Victoria

www.Geelongsallsporttrophies.com.au

GeelongsAllSportTrophies

GEELONG'S

ALL SPORT TROPHIES

We pride ourselves on our great customer service

Follow us on our Facebook page to check out our flash sales & current specials.

NOVEMBER SPECIAL

Discontinued glass awards includes etching at 35 % off RRP. Limited Stock

Ph. 07 4122 4799

Email: toplineaus@gmail.com

345 Kent Street, Maryborough Q 4650

Find us on Facebook

- Shirts & Hoodies
- Caps
- Sublimated Team Shirts
- Stickers
- Kart Wraps
- Merchandise
- Embroidery
- Promotional Items
- Signwriting
- Workwear
- Trophies
- Sashes

NO JOB TOO BIG OR TOO SMALL

Shipping Australia Wide

A PROUD SPONSOR OF THE SKAA

SECTION 5. Penalties

5.1 Penalties for Non-Payment of Accounts –

When an affiliated club has failed to pay any amount owing to the Association within the period noted on the bill for more than 7 days, then their membership rights will be suspended until such time as that account has been paid.

5.3 Penalties for breaching any of the Associations Codes of Conduct or Social Media Policies:

All breaches will be referred to Speedway Australia, who may impose penalties in addition to those imposed by the club. The association reserves the right to obtain legal advice on these matters at any time.

Association imposed penalties will be as per 5.4 below.

5.4 Penalties for breaching these By-laws or any other code, policy, rules or regulations of the association will be discussed within 15 days by the Executive Committee. For a serious breach, an emergency committee 'meeting' may be called:

a) If applicable, the club, driver or guest may be asked to leave any SKAA blue ribbon event venue immediately

b) First Offence: Discussion with the Association President or His / Her representative

c) Second Offence: Letter explaining the breach, the seriousness of the breach, and details of the penalties for further breaches

d) Third Offence (for the same breach or an alternate): Club, driver or guest will be served a notice of suspended penalty (penalty as per 5.4.e below)

e) Fourth Offence: Club representative, driver or guest will be invited to attend a Tribunal Hearing whereby they must show cause as to why any or all of the following penalties shall not apply:

I) Suspension of club membership or driver subscription for a minimum period of 6 months

II) Club: Monetary penalty of a minimum of $1000, Maximum $10000 depending on severity

Driver/ Guest: Monetary penalty of a minimum of $500, Maximum $5000 depending on severity

III) Cancellation of club membership or driver subscription for the season

f) Further or serious breaches:

I) Minimum $5000 monetary penalty

II) Life Ban of Club Membership or driver subscription and/or competing at any event promoted by SKAA affiliated clubs.

5.5 Penalties for Office Bearers or those in positions of authority:

Any Office bearer or person who is found to have breached any of the associations policies, procedures, rules or regulations, to the detriment of the association, will along with the policies imposed as per item 5.4 above, also be removed from office for the remainder of the membership season. Further breaches will incur a Life Ban from any duties.

5.6 Penalties for breaches of a Drug and Alcohol Policy.

a) Any driver or guest who breaches the Speedway Australia Drug and Alcohol Policy during competition times will be required to exit the area immediately. Further penalties may apply as per the Speedway Australia Racing Rules and Regulations. Association imposed penalties as per 5.4 above may also apply.

12.0 Notes

12.0 Notes

13.0 Updates of Rules & Regulations

Insert any rule updates here.

SKAA

Speedway Karting Association of Australasia